TRISTAR MPPT 600V™

Solar Charging System Controller

Installation, Operation and Maintenance Manual

For the most recent manual revision, see the version at:
www.morningstarcorp.com

Solar Battery Charger with
TrakStar™ Maximum Power Point Tracking Technology

MORNINGSTAR
PROFESSIONAL SERIES

www.morningstarcorp.com

TRAKSTAR™
MAXIMUM POWER POINT TRACKING

Simple Network Management Protocol
SNMP™
COMPATIBLE

MODELS

TS-MPPT-60-600V-48
TS-MPPT-60-600V-48-DB

Dimensions in Inches [Millimeters]

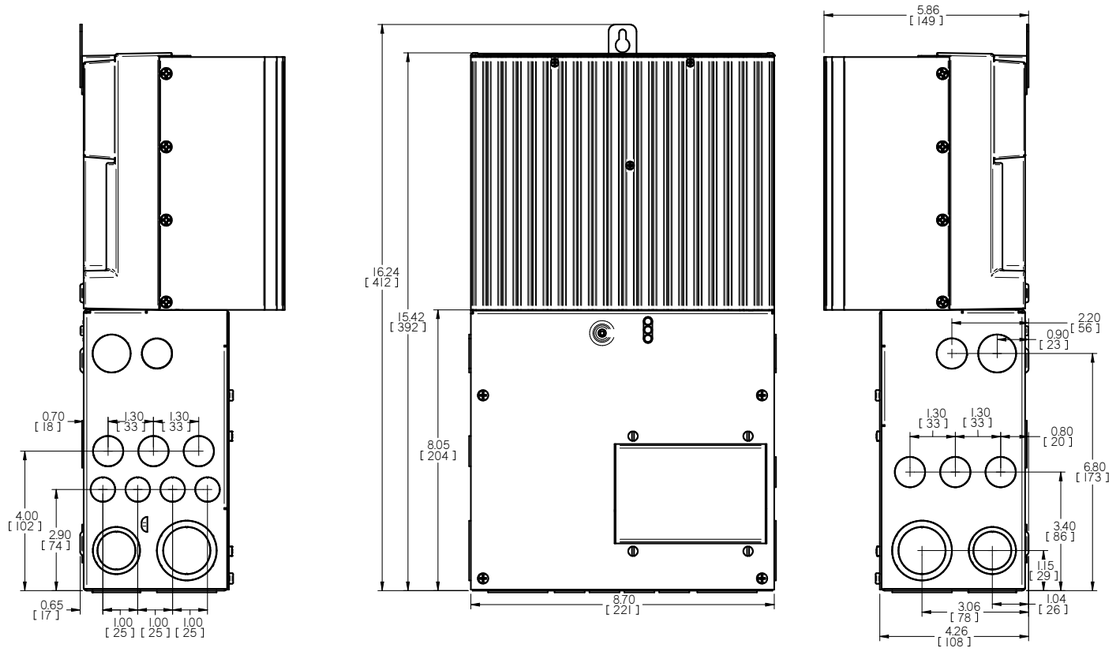

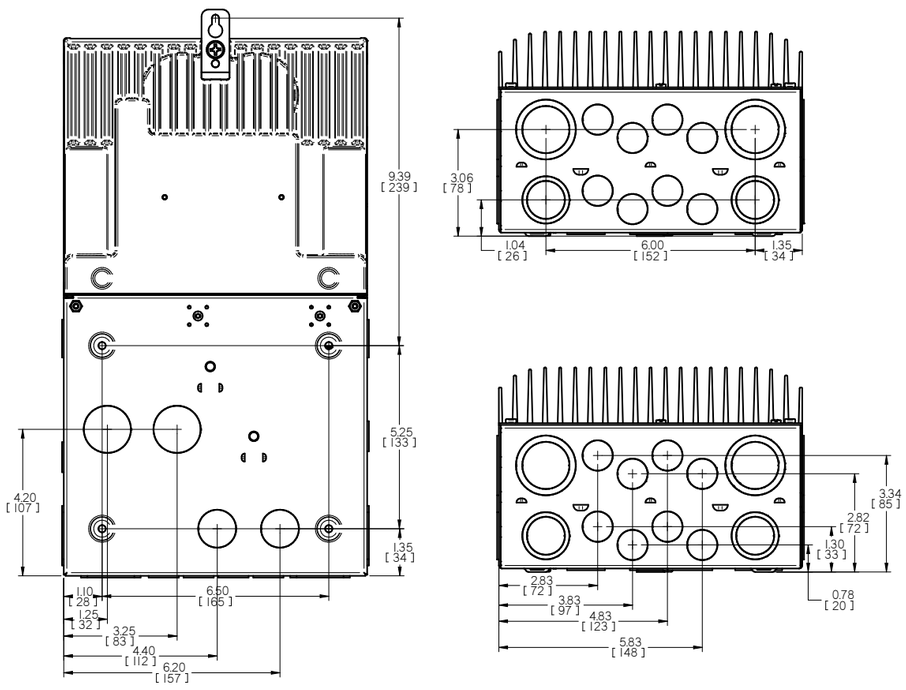

Table of Contents

1.0 Important Safety Instructions **5**

2.0 Getting Started **11**

2.1 Overview 11
2.2 Regulatory Information 11
2.3 Versions and Ratings 12
2.4 Features 13
2.5 Optional Accessories 17

3.0 Installation **18**

3.1 General Information 18
3.2 Wiring Zones 19
3.3 Conduit Knock-outs and Wiring Routing 21
3.4 Controller Preparation 23
3.5 Mounting 26
3.6 Network Connections 28
3.7 Wiring Connections 30
3.8 Configuration 37
3.9 Power-Up & Commissioning 41

4.0 Operation **42**

4.1 TrakStar™ MPPT Technology 42
4.2 Battery Charging Information 43
4.3 Push-button 51
4.4 LED Indications 52
4.5 Protections, Faults & Alarms 54

5.0 Networking and Communications **57**

5.1 Introduction 57
5.2 Morningstar MeterBus™ 58
5.3 Serial RS-232 59
5.4 EIA-485 (formerly RS-485) 61
5.5 Ethernet 62

Table of Contents (Cont.)

6.0 Troubleshooting **66**

6.1 Battery Charging and Performance Issues 66

6.2 Network and Communications Issues 67

7.0 Maintenance and Service **69**

7.1 Important Safety Instructions 69

7.2 Maintenance Schedule 74

8.0 Warranty and Claim Procedure **76**

9.0 Technical Specifications **78**

10.0 Appendix **81**

11.0 Certifications **89**

1.0 Important Safety Instructions

SAVE THESE INSTRUCTIONS.
This manual contains important safety, installation and operating instructions for the TriStar MPPT 600V solar controller. The following symbols are used throughout this manual to indicate potentially dangerous conditions or mark important safety instructions:

WARNING:
Indicates a potentially dangerous condition. Use extreme caution when performing this task.

CAUTION:
Indicates a critical procedure for safe and proper operation of the controller.

NOTE:
Indicates a procedure or function that is important for the safe and proper operation of the controller.

AVERTISSEMENT :
Indique une condition potentiellement dangereuse. Faites preuve d'une prudence extrême lors de la réalisation de cette tâche.

PRUDENCE :
Indique une procédure critique pour l'utilisation sûre et correcte du contrôleur.

REMARQUE :
Indique une procédure ou fonction importante pour l'utilisation sûre et correcte du contrôleur.

Safety Information

- Read all of the instructions and cautions in the manual before beginning installation.
- There are no user serviceable parts inside the TriStar MPPT 600V. Do not disassemble or attempt to repair the controller.

WARNING: RISK OF ELECTRICAL SHOCK.
NO POWER OR ACCESSORY TERMINALS ARE ELECTRICALLY ISOLATED FROM DC INPUT, AND MAY BE ENERGIZED WITH HAZARDOUS SOLAR VOLTAGE. UNDER CERTAIN FAULT CONDITIONS, BATTERY COULD BECOME OVER-CHARGED. TEST BETWEEN ALL TERMINALS AND GROUND BEFORE TOUCHING.

- External solar and battery disconnects are required.
- Disconnect all sources of power to the controller before installing or adjusting the TriStar MPPT 600V.
- There are no fuses or disconnects inside the TriStar MPPT 600V Do not attempt to repair.

Informations de Sécurité

- Lisez toutes les instructions et les avertissements figurant dans le manuel avant de commencer l'installation.
- Le TriStar MPPT 600V ne contient aucune pièce réparable par l'utilisateur. Ne démontez pas ni ne tentez de réparer le contrôleur.

AVERTISSEMENT: RISQUE DE CHOC ÉLETRIQUE.
NON ALIMENTATION OU AUX BORNES D'ACCESSOIRES SONT ISOLÉS ÉLECTRIQUEMENT DE L'ENTRÉE DE C.C ET DOIT ÊTRE ALIMENTÉS À UNE TENSION DANGEREUSE SOLAIRE. SOUS CERTAINES CONDITIONS DE DÉFAILLANCE, LA BATTERIE POURRAIT DEVENIR TROP CHARGÉE. TEST ENTRE TOUTES LES BORNES ET LA MASSE AVANT DE TOUCHER.

External solaire et la batterie se déconnecte sont nécessaires.

- Déconnectez toutes les sources d'alimentation du contrôleur avant d'installer ou de régler le TriStar MPPT 600V.
- Le TriStar MPPT 600V 600Vne contient aucun fusible ou interrupteur. Ne tentez pas de réparer.
- Installez des fusibles/coupe-circuits externes selon le besoin.

Installation Safety Precautions

WARNING:
This unit is not provided with a GFDI device. This charge controller must be used with an external GFDI device as required by the Article 690 of the National Electrical Code for the installation location.

- Mount the TriStar MPPT 600V indoors. Prevent exposure to the elements and do not allow water to enter the controller.
- Install the TriStar MPPT 600V in a location that prevents casual contact. The TriStar MPPT 600V heatsink can become very hot during operation.
- Use insulated tools when working with batteries.
- Avoid wearing jewelry during installation.
- The battery bank must be comprised of batteries of same type, make, and age.
- Do not smoke near the battery bank.
- Power connections must remain tight to avoid excessive heating from a loose connection.
- Use properly sized conductors and circuit interrupters.
- The grounding terminal is located in the wiring compartment and is identified by the symbol below.

Ground Symbol

- This charge controller is to be connected to DC circuits only. These DC connections are identified by the symbol below:

Direct Current Symbol

The TriStar MPPT 600V controller must be installed by a qualified technician in accordance with the electrical regulations of the country where the product is installed. A means of disconnecting all power supply poles must be provided. These disconnects must be incorporated in the fixed wiring.

A permanent, reliable earth ground must be established with connection to the wiring compartment ground terminal.

The grounding conductor must be secured against any accidental detachment. The knock-outs in the wiring compartment must protect wires with conduit or rubber rings.

Précautions de Sécurité D'installation

AVERTISSEMENT: *L'appareil n'est pas fourni avec un dispositif GFDI. Ce contrôleur de charge doit être utilisé avec un dispositif GFDI externe tel que requis par l'Article 690 du Code électrique national de l'emplacement de l'installation.*

- Montez le TriStar MPPT 600V à l'intérieur. Empêchez l'exposition aux éléments et la pénétration d'eau dans le contrôleur.
- Installez le TriStar MPPT 600V dans un endroit qui empêche le contact occasionnel. Le dissipateur de chaleur peut devenir très chaud pendant le fonctionnement.
- Utilisez des outils isolés pour travailler avec les batteries.
- Évitez le port de bijoux pendant l'installation.
- Le groupe de batteries doit être constitué de batteries du même type, fabricant et âge.
- Ne fumez pas à proximité du groupe de batteries.
- Les connexions d'alimentation doivent rester serrées pour éviter une surchauffe excessive d'une connexion desserrée.
- Utilisez des conducteurs et des coupe-circuits de dimensions adaptées.
- La borne de mise à la terre se trouve dans le compartiment de câblage et est identifiée par le symbole ci-dessous estampillé dans le boit:

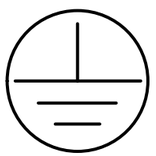

• Ce contrôleur de charge ne doit être connecté qu'à des circuits en courant continu. Ces connexions CC sont identifiées par le symbole ci-dessous:

Le contrôleur TriStar MPPT 600V 600V600V doit être installé par un technicien qualifié conformément aux règlementations électriques du pays où est installé le produit.

Un moyen d'assurer la déconnexion de tous les pôles de l'alimentation doit être fourni. Cette déconnexion doit être incorporée dans le câblage fixe.

À l'aide de la borne de mise à la masse du TriStar MPPT 600V 600V600V (dans le compartiment de câblage), un moyen permanent et fiable de mise à la terre doit être fourni. La fixation de la mise à la terre doit être fixée contre tout desserrage accidentel.

Les ouvertures d'entrée au compartiment de câblage du TriStar MPPT 600V 600V600V doivent être protégées avec un conduit ou une bague.

Battery Safety

WARNING: *A battery can present a risk of electrical shock or burn from large amounts of short-circuit current, fire, or explosion from vented gases. Observe proper precautions.*

AVERTISSEMENT: *Une batterie peut présenter a ris que de choc électrique ou de brûlure de grandes quantités de court-circuit curlouer, incendie ou explosion de ventilé gaz. Observer précautions appropriées.*

WARNING: Risk of Explosion.
Proper disposal of batteries is required. Do not dispose of batteries in fire. Refer to local regulations or codes for requirements.

AVERTISSEMENT: Risque d'Explosion.
Au rebut des piles est nécessaire. Ne pas jeter les piles dans le feu. Se référer aux régle mentations locales ou des codes pour les exigences.

CAUTION: *When replacing batteries, proper specified number, sizes types and ratings based on application and system design*

PRUDENCE: *Lorsque le remplacement des piles, utilisez correctement nombre spécifié, tailles, types et les évaluations basées sur conception de système et d'application.*

CAUTION: *Do not open or mutilate batteries. Released electrolyte is harmful to skin, and may be toxic.*

PRUDENCE: *Ne pas ouvrir ou mutiler les piles. L'électrolyte est nocif pour la peau et peut être toxique.*

- Servicing of batteries should be performed, or supervised, by personnel knowledgeable about batteries, and the proper safety precautions.
- Be very careful when working with large lead-acid batteries. Wear eye protection and have fresh water available in case there is contact with the battery acid.
- Remove watches, rings, jewelry and other metal objects before working with batteries.
- Wear rubber gloves and boots
- Use tools with insulated handles and avoid placing tools or metal objects on top of batteries.
- Disconnect charging source prior to connecting or dis-connecting battery terminals.
- Determine if battery is inadvertently grounded. If so, remove the source of contact with ground. Contact with any part of a grounded battery can result in electrical shock. The likelihood of such a shock can be reduced if battery grounds are removed during installation and maintenance (applicable to equipment and remote battery supplies not having a grounded supply circuit).
- Carefully read the battery manufacturer's instructions before installing / connecting to, or removing batteries from, the TriStar MPPT 600V.
- Be very careful not to short circuit the cables connected to the battery.
- Have someone nearby to assist in case of an accident.
- Explosive battery gases can be present during charging. Be certain there is enough ventilation to release the gases.
- Never smoke in the battery area.
- If battery acid comes into contact with the skin, wash with soap and water. If the acid contacts the eye, flood with fresh water and get medical attention.
- Be sure the battery electrolyte level is correct before starting charging. Do not attempt to charge a frozen battery.
- Recycle the battery when it is replaced.

- Entretien des batteries devrait être effectué ou supervisé, par un personnel bien informé sur les piles et les précautions de sécurité appropriées.
- Soyez très prudent quand vous travaillez avec des grandes batteries au plomb. Portez des lunettes de protection et ayez de l'eau fraîche à disposition en cas de contact avec l'électrolyte.
- Enlevez les montres, bagues, bijoux et autres objets mé talliques avant de travailler avec des piles.
- Porter des bottes et des gants de caoutchouc
- Utiliser des outils avec poignées isolantes et évitez de placer des outils ou des objets métalliques sur le dessus de batteries.
- Débrancher la source de charge avant de brancher ou dis-reliant les bornes de la batterie.
- Utilisez des outils isolés et évitez de placer des objets métalliques dans la zone de travail.
- Déterminer si batterie repose par inadvertance. Dans l'affirmative, supprimer la source du contact avec le sol. Contact avec n'importe quelle partie d'une batterie mise à la terre peut entraîner un choc électrique. La probabilité d'un tel choc peut être réduite si des motifs de batterie sont supprimés pendant l'installation et maintentretien (applicable à l'équipement et les fournitures de pile de la télécommande n'ayant ne pas un circuit d'alimentation mise à la terre *).
- Lisez attentivement les instructions du fabricant de la batterie avant d'installer / connexion à ou retrait des batteries du TriStar MPPT 600V.
- Veillez à ne pas court-circuiter les câbles connectés à la batterie.
- Ayez une personne à proximité qui puisse aider en cas d'accident.

- Des gaz explosifs de batterie peuvent être présents pendant la charge. Assurez-vous qu'une ventilation suffisante évacue les gaz.
- Ne fumez jamais dans la zone des batteries
- En cas de contact de l'électrolyte avec la peau, lavez avec du savon et de l'eau. En cas de contact de l'électrolyte avec les yeux, rincez abondamment avec de l'eau fraîche et consultez un médecin.
- Assurez-vous que le niveau d'électrolyte de la batterie est correct avant de commencer la charge. Ne tentez pas de charger une batterie gelée.
- Recyclez la batterie quand elle est remplacée.

About this Manual

This manual provides detailed installation and usage instructions for the TriStar MPPT 600V controller. Only qualified electricians and technicians who are familiar with solar system design and wiring practices should install the TriStar MPPT 600V. The usage information in this manual is intended for the system owner/operator.

2.0 Getting Started

2.1 Overview

Thank you for selecting the TriStar MPPT 600V charge controller with TrakStar™ MPPT Technology. The TriStar MPPT 600V (TS-MPPT-60-600V) is an advanced maximum power point tracking solar battery charger. The controller features a smart tracking algorithm that finds and maintains operation at the power source's peak power point, maximizing energy harvest.

The TriStar MPPT 600V battery charging process has been optimized for long battery life and improved system performance. Self-diagnostics and electronic error protections prevent damage when installation mistakes or system faults occur. The controller also features eight (8) adjustable settings switches, several communication ports, and terminals for remote battery temperature and voltage measurement.

Please take the time to read this operator's manual and become familiar with the controller. This will help you make full use of the many advantages the TriStar MPPT 600V can provide for your PV system.

2.2 Regulatory Information

NOTE: *This section contains important information for safety and regulatory requirements.*

The TriStar MPPT 600V controller should be installed by a qualified technician according to the electrical rules of the country in which the product will be installed.

TriStar MPPT 600V controllers comply with the following EMC standards:
- Immunity: EN61000-6-2: 2005
- Emissions: EN55022:2 2007 with A1 and A3 Class B1
- Safety: EN60335-1 and EN60335-2-29 (battery chargers)

A means shall be provided to ensure all pole disconnection from the power supply. This disconnection shall be incorporated in the fixed wiring.

Using the TriStar MPPT 600V grounding terminal (in the wiring compartment), a permanent and reliable means for grounding shall be provided. The clamping of the earthing shall be secured against accidental loosening.

The entry openings to the TriStar MPPT 600V wiring compartment shall be protected with conduit or with a bushing.

FCC requirements:
This device complies with Part 15 of the FCC rules. Operation is subject to the following two conditions: (1) This device may not cause harmful interference, and (2) this device must accept any interference received, including interference that may cause undesired operation. Changes or modifications not expressly approved by Morningstar for compliance could void the user's authority to operate the equipment.

NOTE:
This equipment has been tested and found to comply with the limits for a Class B digital device, pursuant to Part 15 of the FCC rules. These limits are designed to provide reasonable protection against harmful interference in a residential installation. This equipment generates, uses, and can radiate radio frequency energy and, if not installed and used in accordance with the instruction manual, may cause harmful interference to radio communication. However, there is no guarantee that interference will not occur in a particular installation. If this equipment does cause harmful interference to radio or television reception, which can be determined by turning the equipment on and off, the user is encouraged to try to correct the interference by one or more of the following measures:

- Re-orient or re-locate the receiving antenna.
- Increase the separation between the equipment and receiver.
- Connect the equipment into an outlet on a circuit different from that to which the receiver is connected.
- Consult the dealer or an experienced radio/TV technician for help.

This Class B digital apparatus complies with Canadian ICES-003.
Cet appareil numerique de la classe B est conforme a la norme NMB-003 du Canada.

2.3 Versions and Ratings

There are two versions of TriStar MPPT 600V controller:

TS-MPPT-60-600V-48
- Maximum 60 amps continuous battery current
- 48 volt DC systems
- Maximum 600 volt DC solar input voltage
- RS-232, EIA-485, MeterBus™, and Ethernet communication ports

TS-MPPT-60-600V-48-DB
- Maximum 60 amps continuous battery current
- 48 volt DC systems
- Maximum 600 volt DC solar input voltage
- RS-232, EIA-485, MeterBus™, and Ethernet communication ports
- Includes enhanced wiring Disconnect Box (DB) with PV and battery disconnect switches

To comply with the National Electric Code (NEC), the current rating of the controller must be equal to or greater than 125% of the power source's short circuit current output (Isc). Therefore, the maximum allowable power source input to the TriStar MPPT 600V controller for compliance with the NEC is 48 amps Isc*

**Power source Isc @ STC*

2.4 Features

The features of the TS-MPPT-60-600V-48 model are shown in Figure 2-1 below. An explanation of each feature is provided.

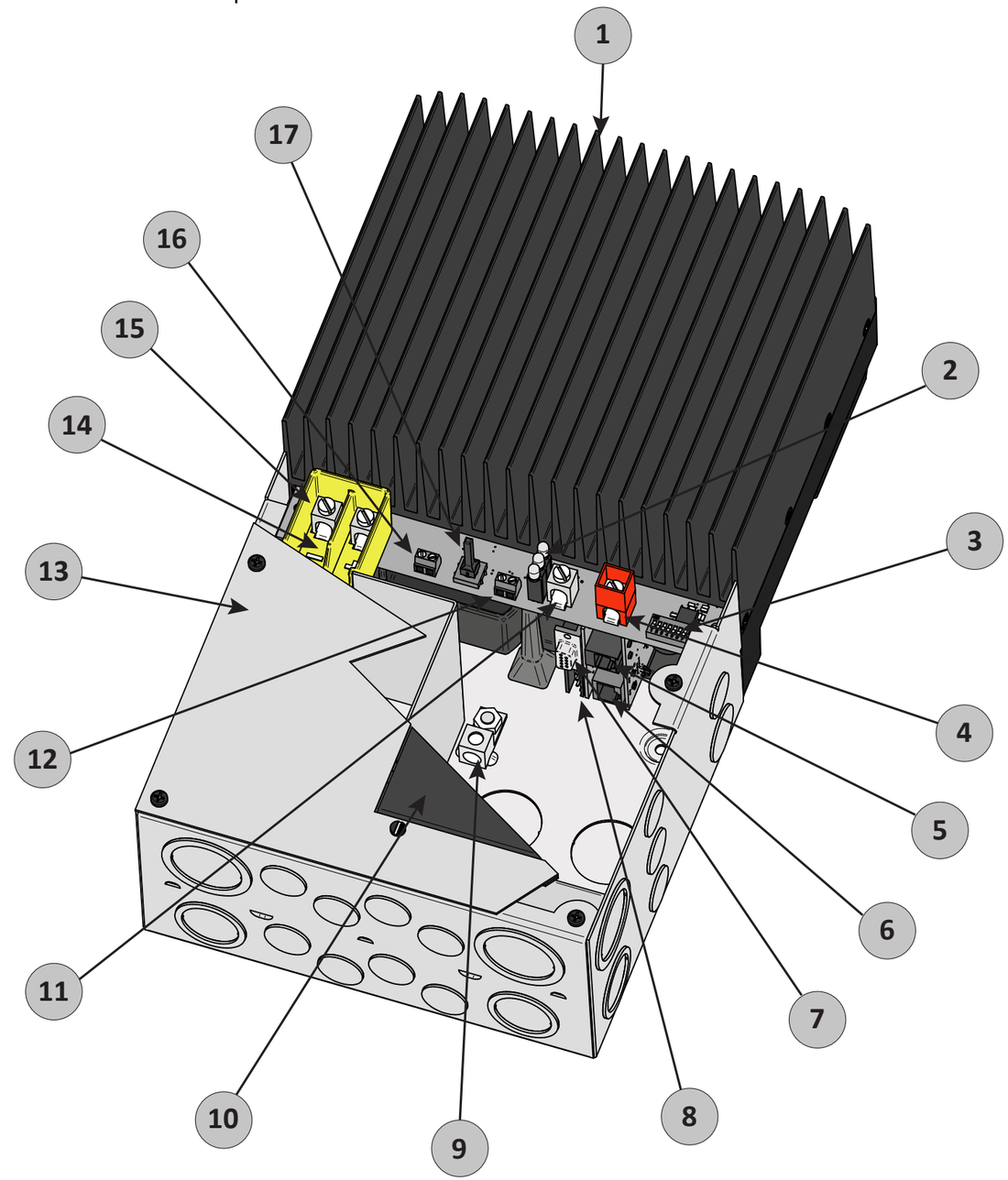

Figure 2-1. TriStar MPPT 600V Features

1 - Heatsink
Aluminum heatsink to dissipate controller heat (the TriStar MPPT 600V is 100% passively cooled for reliability)

2 - LED Indicators
Three *state of charge* (SOC) LED indicators show charging status and controller faults

3 - Settings Switches
Eight (8) settings switches to configure operation of the TriStar MPPT 600V

4 - Battery Positive Terminal (red)
Power connection for Battery (+)

5 - MeterBus™ Port
RJ-11 socket for Morningstar MeterBus™ network connections

6 - Ethernet Port
RJ-45 socket for LAN/internet connections

7 - Serial RS-232 Port
9-pin serial connector (female)

8 - EIA-485 Port
Four (4) position screw terminal for EIA-485 bus connections

9 - Ground Terminals (2 total)
A chassis ground terminal for equipment grounding

10 - Blank Meter Cover (secured with 4 screws)
A plate that covers the mounting location for the optional digital meter (Model: TS-M-2-600V)

11 - Battery Negative Power Terminal
Negative terminal for negative battery cable termination

12 - Remote Temperature Sensor Terminals
Connection point for a Morningstar RTS to remotely monitor battery temperature

13 - Wiring Box Cover
Sheet metal wiring box cover protects power connections

14 - Solar Terminal Bridge (yellow)
Isolates high voltage PV wiring from low voltage wiring area

15 - Solar Terminals
Power connections for Solar (+) and (-)

16 - Battery Voltage Sense Terminals
Terminals for battery voltage input provide accurate battery voltage measurement

17 - Push-button Switch
Manually reset from an error or fault, also used to start/stop a manual equalization.

The features of the TS-MPPT-60-600V-48-DB model are shown in Figure 2-2 below. An explanation of each feature is provided.

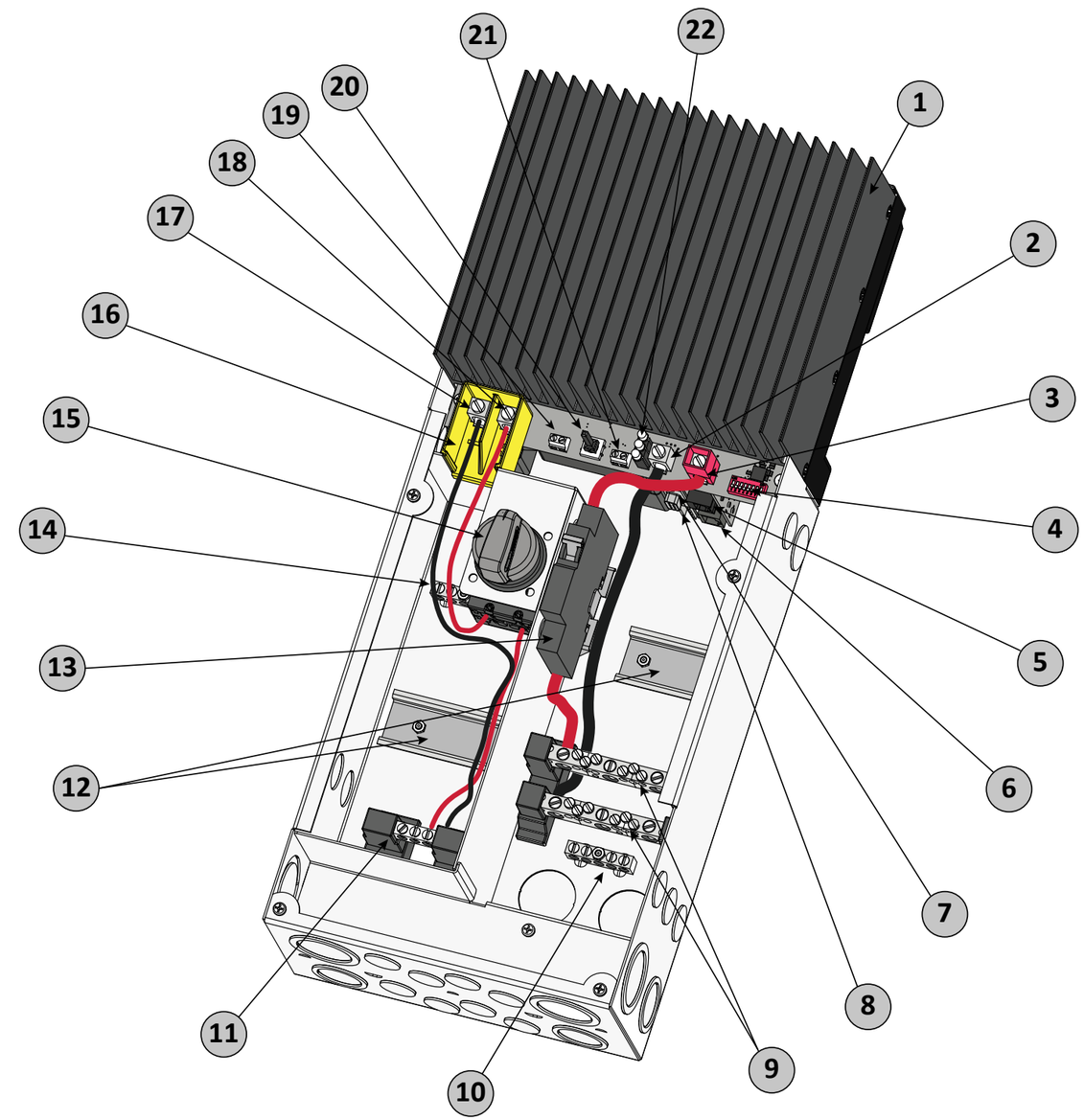

Figure 2-2 TriStar MPPT 600V-DB Features

1 - Heatsink
Aluminum heatsink to dissipate controller heat (the TriStar MPPT 600V is 100% passively cooled for reliability)

2 - Battery Negative Power Terminal
Power connection for (-) battery cable termination

3 - Battery Positive Power Terminal (red)
Power connection for (+) battery cable termination

4 - Settings Switches
Eight (8) settings switches to configure operation of the TriStar MPPT 600V-DB

5 - MeterBus™ Port
RJ-11 socket for Morningstar MeterBus™ network connections

6 - Ethernet Port
RJ-45 socket for LAN/internet connections

7 - Serial RS-232 Port
9-pin serial connector (female)

8 - EIA-485 Port
Four (4) position screw terminal for EIA-485 bus connections

9 - Battery Terminal Blocks
Power connection points for Battery (+) and (-)

10 - Grounding Terminals
Chassis terminals for equipment grounding

11 - Solar Terminal Blocks (one shown)
Power connection points for solar (+) and (-)

12 - Auxilliary DIN Rail Mounts

13 - Battery Breaker (63A rating)
Battery (+) disconnect point

14 - Grounding Terminal
A chassis terminal for equipment grounding

15 - Solar Disconnect Switch
Solar (+) disconnect switch

16 - Solar Terminal Bridge (yellow)
Isolates high voltage PV wiring from low voltage wiring area

17 - Solar Negative Power Terminal
Pre-wired connection point for (-) solar cable termination

18 - Solar Positve Power Terminal
Pre-wired connection point for (+) solar cable termination

19 - Battery Voltage Sense Terminals
Terminals for battery voltage input provide accurate battery voltage measurement

20 - Push-button Switch
Manually reset from an error or fault, also used to start/stop a manual equalization.

21 - Remote Temperature Sensor Terminals
Connection point for a Morningstar RTS to remotely monitor battery temperature

22 - LED Indicators
Three *state of charge* (SOC) LED indicators show charging status and controller faults

2.5 Accessories

The accessories described below are available for purchase separately from your authorized Morningstar dealer. Please see the individual product manuals for installation and operation details.

Ground Fault Protection Device (GFPD-600V)

The GFPD detects power source ground faults and disconnects the as required by the U.S. National Electrical Code. The GFPD unit is mounted in a wiring box and includes wiring hardware needed to connect the unit to a TriStar MPPT 600V or TriStar MPPT 600V 600V600V-DB.

TriStar Meter 2-600V (TS-M-2-600V); TriStar Remote Meter 2 (TS-RM-2)

The TS-M-2-600V mounts directly on the TriStar MPPT 600V controller, replacing the blank meter cover on the wiring box lid. The TS-RM-2 can be flush mounted in a wall or into a standard duplex (2-gang) electrical box. A 2 x 16 character display shows system operating information, error indications, and self-diagnostic information. Four (4) buttons make navigating the meter menus easy.

TriStar meters connect to the RJ- 11 MeterBus™ port on the TriStar MPPT 600V. One meter can display select full system information when multiple TriStar MPPT 600V or other TriStar controllers are connected via a MeterBus™ network.

Meter Hub (HUB-1)

A Morningstar MeterBus™ network with multiple controllers requires a Meter Hub for electrical isolation. The HUB-1 allows communication between MeterBus™ compatible Morningstar products, including the TriStar MPPT 600V controller. DIN rail compatible. See section 5.2 for more details.

Relay Driver (RD-1)

The Relay Driver™ accessory enables the TriStar MPPT 600V to control external devices. Four (4) relay control ports can be configured (in various combinations) to perform the following tasks:

- generator control (2, 3 and 4-wire configurations)
- dry contacts for alarms and other signals
- advanced load control
- vent fan control
- DIN rail compatible or surface mount

For more information on the Relay Driver, visit our website at www.morningstarcorp.com or inquire with your local Morningstar dealer.

EIA-485 / RS-232 Communications Adapter (RSC-1)

Connect one or more TriStar MPPT 600V controllers to a PC or to other serial devices using the EIA-485 adapter. The adapter converts an RS-232 serial interface to EIA-485 compliant bus signals. An LED shows network activity and errors. DIN rail compatible.

3.0 Installation

3.1 General Information

WARNING: Equipment Damage or Risk of Explosion
Never install the TriStar MPPT 600V in an enclosure with vented/flooded batteries. Battery fumes are flammable and will corrode and destroy the TriStar MPPT 600V circuits.

CAUTION: Equipment Damage
When installing the TriStar MPPT 600V in an enclosure, ensure sufficient ventilation. Installation in a sealed enclosure will lead to over-heating and a decreased product lifetime.

AVERTISSEMENT: Endommagement de l'équipement ou risque d'explosion
N'installez jamais le TriStar MPPT 600V 600Vdans une enceinte avec des batteries à évent/à électrolyte liquide. Les vapeurs des batteries sont inflammables et corroderont et détruiront les circuits du TriStar MPPT 600V.

PRUDENCE: Endommagement de l'équipement
Assurez une ventilation suffisante en cas d'installation du TriStar MPPT 600V 600Vdans une enceinte. L'installation dans une enceinte hermétique entraîne une surchauffe et une réduction de la durée de vie du produit.

The installation is straight-forward, but it is important each step is done correctly and safely. A mistake can lead to dangerous voltage and current levels. Be sure to carefully follow each instruction in this section. **READ ALL INSTRUCTIONS FIRST** before beginning installation.

The installation instructions are for installation of a negative grounded system. U.S National Electrical Code (NEC) requirements are noted on occasion for convenience, however the installer should have a complete understanding of NEC and UL requirements for photovoltaic installations.

Solar and battery fuses or DC breakers are required in the system. These protection devices are external to the TriStar MPPT 600V controller, and must be a maximum of 90 amps for the TriStar MPPT 600V.

Maximum battery short-circuit current rating must be less than the interrupt current rating of the battery over-current protection device referenced above.

Stranded wires to be connected to the TriStar MPPT 600V terminals should be prepared first with e.g. clamped copper heads, etc. to avoid the possibility of one conductor free out of the connection screw, and possible contact with the metal enclosure.

Recommended Tools:

• Wire strippers • Wire cutters • #2 & #0 Phillips screwdriver • slotted screwdrivers	• Pliers • Drill3/32" (2.5 mm) drill bit • Level • hack saw (cutting conduit)

3.2 Wiring Zones

The 600V solar circuits must be separated from the low voltage battery circuits and communication wiring within the wiring box. Figure 3-1 below shows the high voltage and low voltage zones (shaded) within the wiring box. There is overlap in the zones as pictured because the removable wiring divider separates the high voltage solar wiring and low voltage wiring. Solar high voltage wiring should be routed below the removable wiring divider. The yellow *Solar Terminal Bridge* must be properly fitted in place before making the solar power terminal connections.

The battery wiring and all communication cables must only be routed within the low voltage wiring zone. After the solar wiring is installed, the wiring divider should be secured in place, and the battery cables routed above the divider. Detailed installation steps are provided in the following sections.

NOTE: *If ALL field wiring, including communications cable, is rated for 600V, wiring zone separation is not required. In this case, it may be more convenient to remove the high-low voltage wiring box divider, and terminate conduit that contains mixed voltage conductors at one point.*

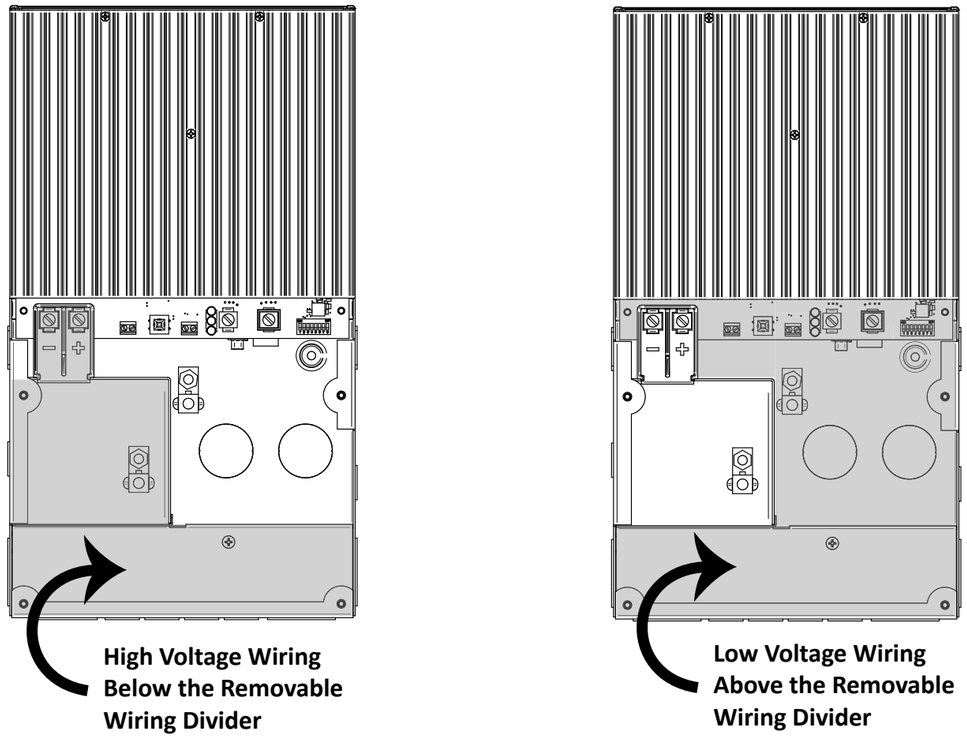

Figure 3-1. Low voltage and high voltage wiring zones (shaded areas)

3.3 Conduit Knock-Outs and Wire Routing

Knock-outs are provided for routing cables through conduit or wire glands. Table 3-1 details the knock-out sizes and quantity provided on the TriStar MPPT 600V wiring box. Knockout placement dimensions are on the inside front cover. Figures 3-2 to 3-5 show knock-out types.

The TriStar MPPT 600V wiring box provides continuous and separate paths for high voltage (solar) and low voltage (battery & COM) wiring routing. These allow wiring to pass between TriStar MPPT 600V controllers that are mounted side-by-side without the need for external conduit tubing. Table 3-1 identifies the pass-through knock-outs which may be used for this purpose. Figure 3-6 shows the routing of the high voltage and low voltage wiring paths.

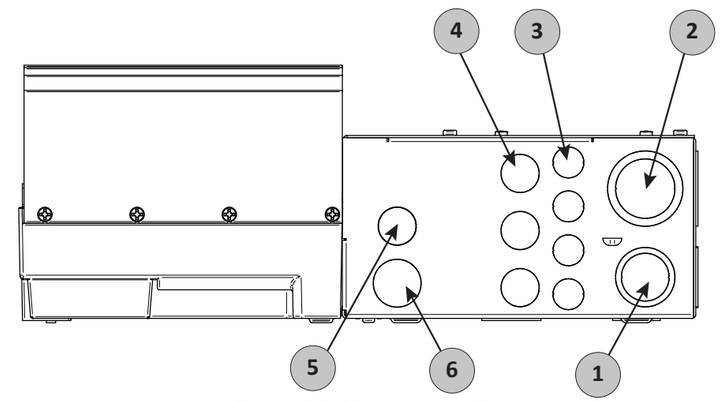

Figure 3-2. Knock-outs, left view

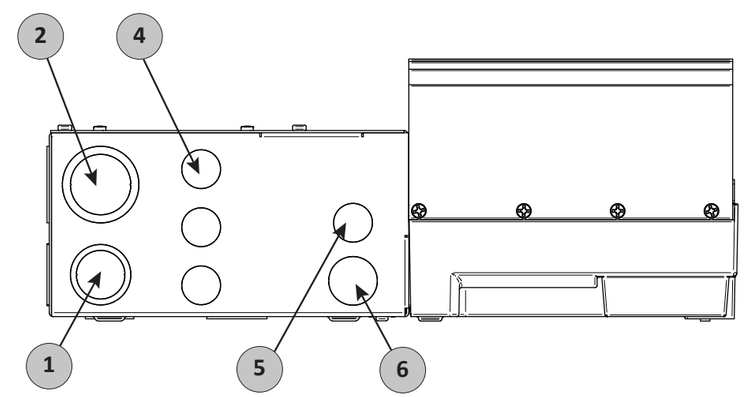

Figure 3-3. Knock-outs, right view

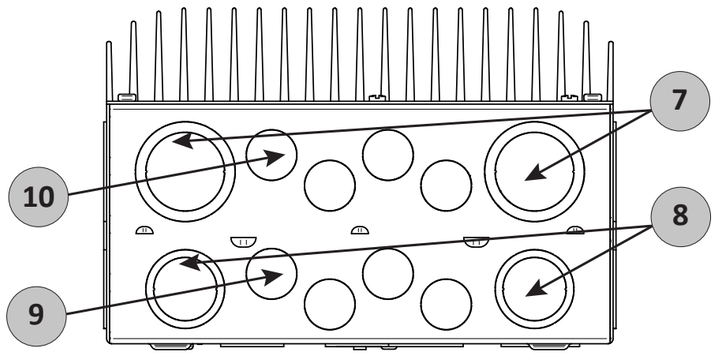

Figure 3-4. Knock-outs, bottom view

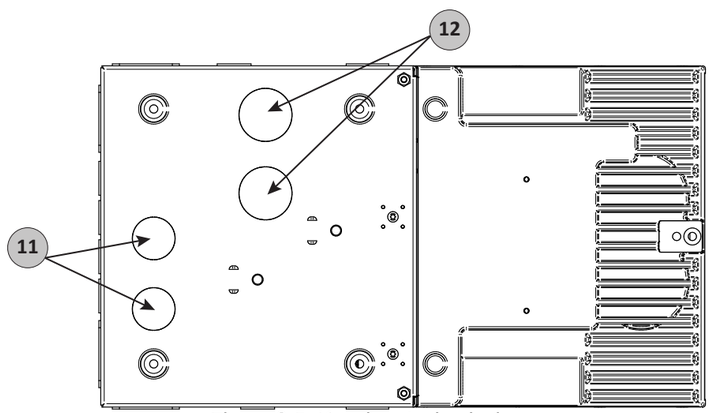

Figure 3-5. Knock-outs, back view

Item	Quantity	Trade Size	Hole Dimension	Circuit(s)	Pass-Through?
1	2 (Concentric)	1” & 3/4”	1.36“ (34.5 mm) / 1.09” (27.8 mm)	Solar (high voltage)	YES
2	2 (Concentric)	1-1/4 “ & 1 “	1.72” (43.7 mm) / 1.36“ (34.5 mm)	Battery (low voltage)	YES
3	4	Fits select MC-style Solar connectors **	18 mm	Solar (high voltage)	NO
4	3	1/2” or M20	7/8” (22.2 mm)	Solar (high voltage)	NO
5	1	1/2” or M20	7/8” (22.2 mm)	Communication	YES
6	1		1.36“ (34.5 mm)	Communication	YES
7	2 (Concentric)	1-1/4 “ & 1 “	1.72” (43.7 mm) / 1.36“ (34.5 mm)	Battery (low voltage)	NO
8	2 (Concentric)	1” & 3/4”	1.36“ (34.5 mm) / 1.09” (27.8 mm)	Solar (high voltage)	NO
9	4	1/2” or M20	0.88” (22.2 mm)	Solar (high voltage)	NO
10	4	1/2” or M20	0.88” (22.2 mm)	Battery (low voltage)	NO
11	2	3/4”	1.09” (27.8 mm)	Solar (high voltage)	NO
12	2	1”	1.36“ (34.5 mm)	Battery (low voltage)	NO

** Solar connector mounting hole diameters vary. Wieland Solar DC connectors recommended.

Table 3-1. Knock-out sizes

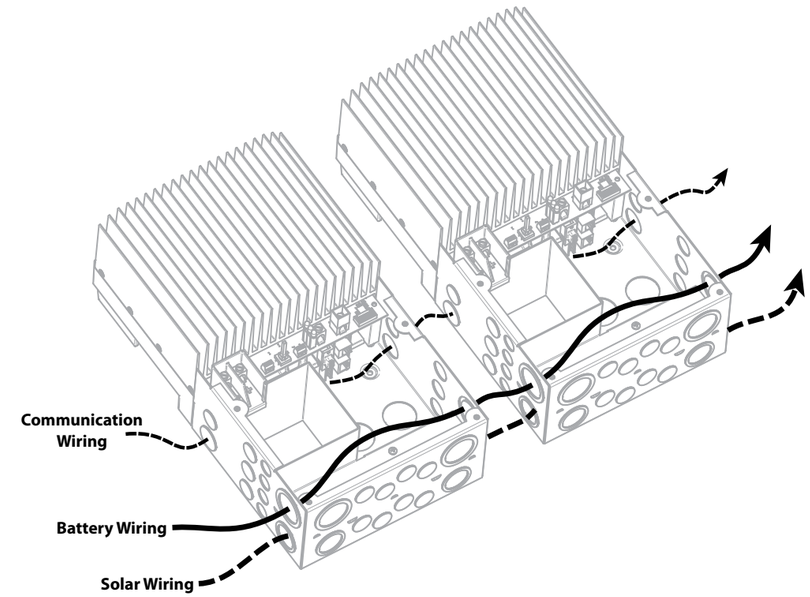

Figure 3-6. Wiring pass-through paths between multiple controllers

3.4 Controller Preparation (TS-MPPT-60-600V-48 and *TS-MPPT-60-600V-48-DB)*

Step 1 - Remove the Wiring Box Cover

CAUTION: Shock Hazard
Disconnect all power sources to the controller before removing the wiring box cover. Never remove the cover when voltage exists on any of the TriStar MPPT 600V power connections.

PRUDENCE : Risque de décharge électrique
Déconnectez toutes les sources d’alimentation du contrôleur avant d’enlever le couvercle du boîtier de câblage. Ne retirez jamais le couvercle en présence de tension sur une des connexions d’alimentation du TriStar MPPT 600V 600V600V.

Use a #2 Phillips screw driver to remove the four (4) screws that secure the wiring box cover as shown in figure 3-7 below.

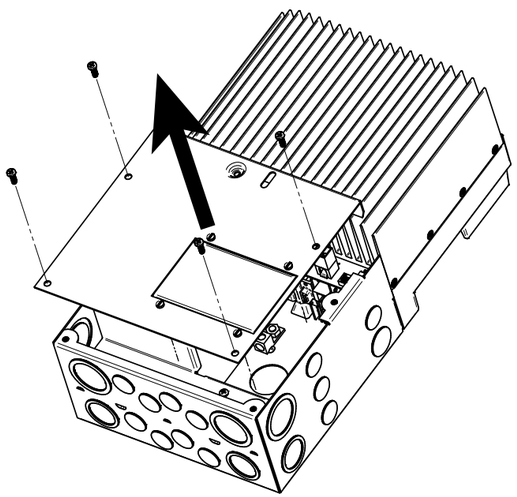

Figure 3-7. Remove the wiring box cover

Step 2 - Remove the Wiring Divider (TS-MPPT-60-600-V48 and TS-MPPT-60-600V-48-DB) and Solar Terminal Bridge (TS-MPPT-60-600V-48 ONLY)

The wiring divider separates the solar high voltage wiring from the low voltage battery and communication circuits. See Figure 3-8 . The divider is secured with only one screw.

1. Use a #2 Philips screw driver to remove the screw.
2. Lift and tilt the divider towards the bottom of the unit as shown in Figure 3-8.
3. Lift the divider out of the wiring box and set the divider and screw aside. The divider must be replaced in a later step.

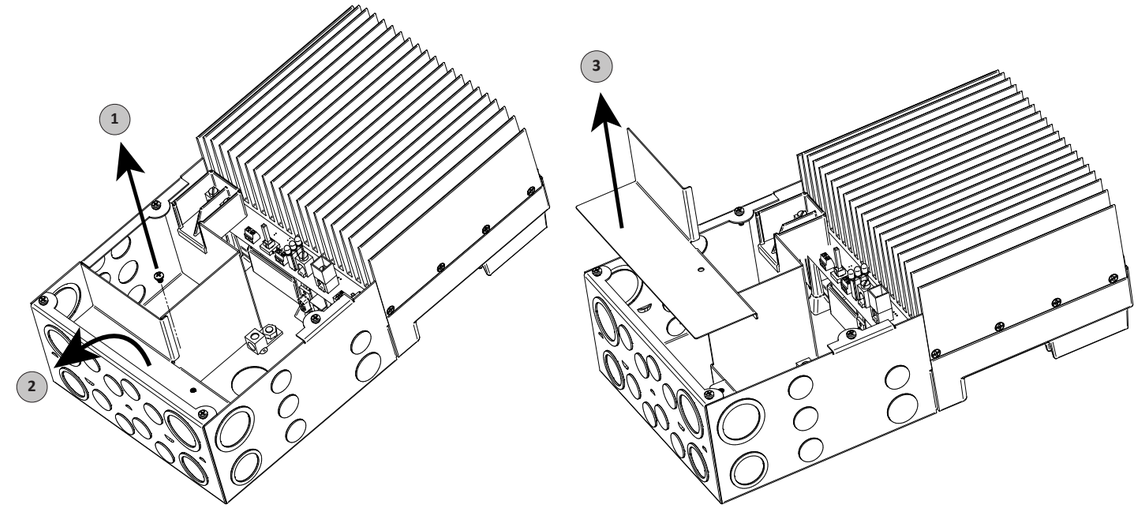

Figure 3-8. Remove the Wiring Divider

The Solar Terminal Bridge provides a safe path between the Solar power terminals and the 600V high voltage wiring area. The bridge is removable to allow access to the conduit knock-outs below the bridge. To remove the bridge, gently pull the bridge straight out of the wiring box as shown in figure 3-9.

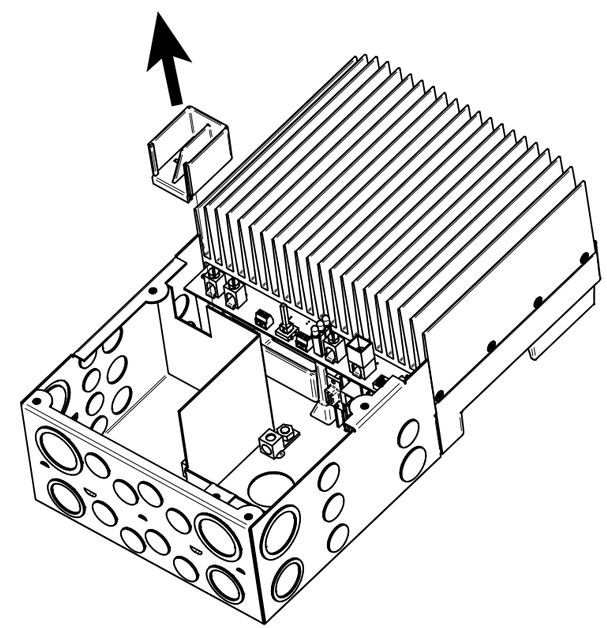

Figure 3-9. Remove the Solar Terminal Bridge.

Step 3 - Remove the Knock-Outs

Plan the routing of each cable that will connect to the TriStar MPPT 600V before removing any knock-outs. The 1/2” (M20) knock-outs are ideal for routing network cables, which must be placed in separate conduit from power conductors.

Use a flat head screwdriver to remove the necessary knock-outs. A hammer may also be required to apply extra force. Refer to Section 3.2 for detailed knockout information.

WARNING: Shock Hazard
Always use bushings, connectors, clamp connectors, or wire glands in the knock-out openings to protect wiring from sharp edges.

PRUDENCE : Risque de décharge électrique
Utilisez toujours des bagues, des connecteurs, des raccordements à collets ou des fouloirs dans les ouvertures afin de protéger le câblage des bords coupants.

WARNING: Shock Hazard
Never route network cables in the same conduit as the power conductors.

AVERTISSEMENT: Risque de décharge électrique
N’acheminez jamais les câbles réseau dans le même conduit que les conducteurs d’alimentation.

3.5 Mounting

The mounting location is important to the performance and operating life of the controller. The environment must be dry and protected from water ingress. If required, the controller may be installed in a ventilated enclosure with sufficient air flow. Never install the TriStar MPPT 600V in a sealed enclosure. The controller may be mounted in an enclosure with sealed batteries, but never with vented/flooded batteries. Battery fumes from vented batteries will corrode and destroy the TriStar MPPT 600V circuits.

Step 4 - Mounting to a Vertical Surface

CAUTION: Risk of Burns
Install the TriStar MPPT 600V in a location that prevents casual contact. The TriStar MPPT 600V heatsink can become very hot during operation.

ATTENTION : Risque de brûlures
installez le TriStar MPPT 600V 600V600V dans un endroit qui empêche le contact occasionnel. Le dissipateur de chaleur TriStar MPPT 600V 600V600V peut devenir très chaude pendant le fonctionnement.

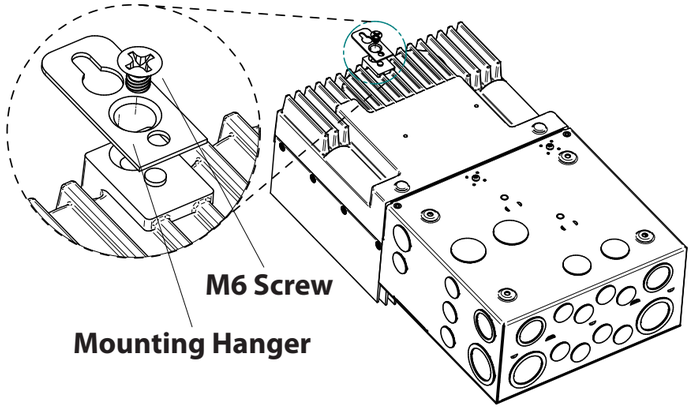

Figure 3-10. Attaching the mounting hanger

1. Attach the mounting hanger to the bottom of the TriStar MPPT 600V with the M6 screw provided as shown in figure 3-10.
2. Place the TriStar MPPT 600V on a vertical surface protected from direct sun, high temperatures, and water. The TriStar MPPT 600V requires at least 6” (150 mm) of clearance above and below and at least 1” (25 mm) between the controller and adjacent walls for proper air flow as shown in figure 3-11 below.

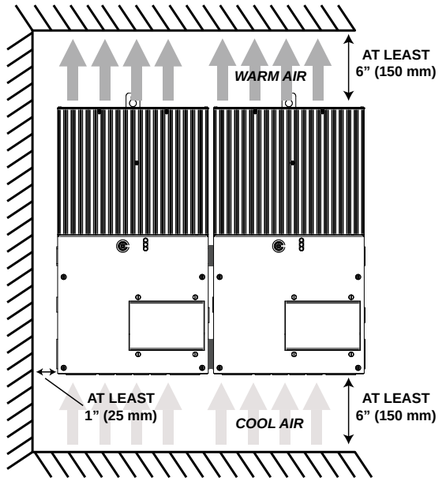

Figure 3-11. Required mounting clearance for air flow

3. Place a mark on the mounting surface at the top of the keyhole.
4. Remove the controller and drill a 3/32” (2.5 mm) hole at the drill mark.

5. Insert a #10 screw (included) into the top pilot hole. Do not tighten the screw completely. Leave a 1/4” (6 mm) gap between the mounting surface and screw head.

6. Carefully align the keyhole on the TriStar MPPT 600V with the screw head. Slide the TriStar MPPT 600V down over the keyhole.

Check for vertical plumb with a level.

7. Mark four (4) mounting hole locations in the wiring box.

8. Remove the controller and drill 3/32” (2.5 mm) holes at the drill marks.

9. Carefully align the keyhole on the TriStar MPPT 600V with the screw head. Slide the TriStar MPPT 600V down over the keyhole. The pre-drilled pilot holes should align with the mounting holes in the wiring box.

10. Secure the controller with four (4), for DB model, #10 mounting screws.

11. Tighten the keyhole screw.

3.6 Network Connections

Step 5

Network connections allow the TriStar MPPT 600V to communicate with other controllers or computers. A network can be as simple as one controller and one PC, or as complex as dozens of controllers monitored via the internet. Review section 5.0 for more information about networking and the connection(s) required for your system.

WARNING: Shock Hazard
Only route network cables in the same conduit as the photovoltaic power conductors if all conductors are rated for 600V.

WARNING: Shock Hazard
Only use 300 volt or higher UL rated communication cable.

AVERTISSEMENT: Risque de décharge électrique
Seulement acheminez les câbles de réseau dans le même conduit que les conducteurs d'alimentation si tous les conducteurs sont évalués à 600 V.

AVERTISSEMENT : Risque de décharge électrique
Utilisez uniquement 300 volts ou supérieur UL câble de communication.

Connect the appropriate network cables to the TriStar MPPT 600V at this time. Access to the network ports is easier before the battery power cables are attached. The ports are located inside the conduit wiring box on the lower circuit board as shown in figure 3-12.

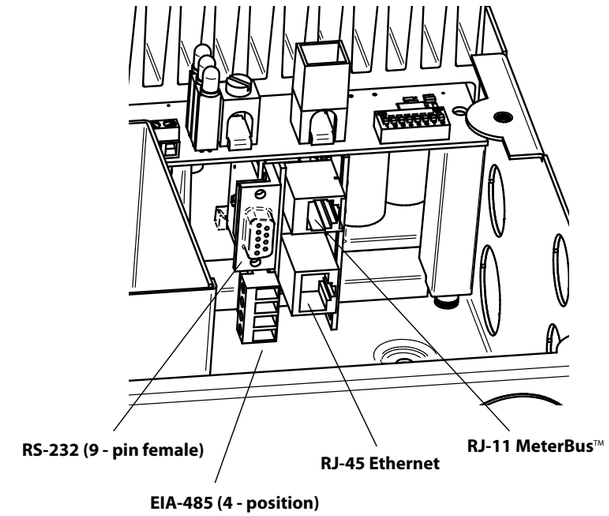

Figure 3-12. TriStar MPPT 600V network port locations

EIA-485 Connection
The four (4) position EIA-485 connector on the TriStar MPPT 600V 600Vmust be removed to access the terminal screws. Remove the socket connector by firmly grasping the connector body and pulling away from the circuit board as shown in figure 3-13.

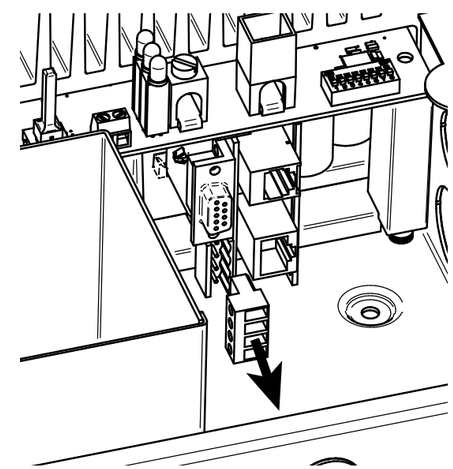

Figure 3-13. Removing the EIA-485 socket connector

RS-232 Connection

The serial RS-232 port is a standard 9-pin (DB9) female connector. A low-profile serial connector is recommended to save room in the wiring box.

NOTE:
The RS-232 and EIA-485 ports share hardware. Both ports cannot be used simultaneously.

REMARQUE :
Les ports RS-232 et EIA-485 partagent le matériel. Ils ne peuvent pas être utilisés simultanément.

Ethernet Connection

The RJ-45 Ethernet jack features two (2) indicator LEDs for connection status and network traffic. Use CAT-5 or CAT-5e twisted pair cable and RJ-45 plugs. If possible, pull the network cable through conduit before crimping on the RJ-45 connectors. If using pre-assembled cables, take care not to damage the plugs when the cables are pulled through conduit.

MeterBus™ Connection

MeterBus™ networks use standard 4-wire or 6-wire RJ-11 telephone cables. If possible, pull the telephone cable through conduit before crimping on the RJ-11 connectors. If using pre-assembled cables, take care not to damage the plugs when the cables are pulled through conduit.

3.7 Wiring Connections

Step 6 - Power Connections

NOTE:
To comply with the NEC, the TriStar MPPT 600V must be installed using wiring methods in accordance with the latest edition of the National Electric Code, NFPA 70.

REMARQUE :
Pour la conformité CNE, le TriStar MPPT 600V 600Vdoit être installé selon des méthodes de câblage conformes à la dernière édition du Code électrique national, NFPA 70.

Wire Size

The four large power terminals are sized for 14 - 2 AWG (2.5 - 34 mm²) wire.* The terminals are rated for copper and aluminum conductors.** Use only UL-listed Class B 300 Volt stranded wire for battery connections. Good system design generally requires large conductor wires for the solar and battery connections that limit voltage drop losses to 2% or less. The wire tables in the appendix on pages 77-80 provide wire sizing information for connecting the power source and battery bank to the TriStar MPPT 600V with a maximum of 2% voltage drop.

Minimum Wire Size (Field Wiring Connections Only)

The NEC requires that the wires carrying the system current never exceed 80% of the conductor's current rating. Table 3.2 below provides the minimum size of copper wire for battery output connections allowed by NEC for both TriStar MPPT 600V models when the output current equals the full nameplate rating. Wire types rated for 75°C and 90°C are included.

* The TS-MPPT-60-600V-48-DB comes pre-wired with #6 AWG copper wire. If replacement is required, use #6 AWG or larger wire.
** The TS-MPPT-60-600V-48-DB comes pre-wired with #6 AWG copper wire. If replacement is required, use only copper conductors.

Wire Type	75°C Wire	90°C Wire
Copper	4 AWG (21 mm²)	6 AWG (13 mm²)
Aluminum	2 AWG (34 mm²)	4 AWG (21 mm²)

Table 3-2 Minimum Output Wire Sizes

Disconnects

WARNING: Shock Hazard
Fuses, circuit breakers, and disconnect switches should never open grounded system conductors. Only GFDI devices are permitted to disconnect grounded conductors.

AVERTISSEMENT : Risque de décharge électrique
Les fusibles, coupe-circuits et interrupteurs ne doivent jamais ouvrir les conducteurs du système mis à la terre. Seuls les dispositifs GFDI sont autorisés à déconnecter les conducteurs reliés mis à la terre.

Circuit breakers or fuses must be installed in both the battery and solar circuits. ***The protection device ratings and installation methods must conform to NEC requirements.***

WARNING: The TriStar MPPT 600V is not protected against PV short circuit faults. A breaker or fuse, close to the controller, in the (+) PV input wire will also protect the PV wiring against a short that may draw battery current backwards through the product.

AVERTISSEMENT : *Le TS-MPPT-600V-TR n'est pas protégé contre les défauts de court-circuit de PV. Un disjoncteur fusible, ou près du programmateur, dans le signe (+) PV d'entrée fil protégera également le câblage PV contre un court-circuit qui peut tirer une batterie courant en arrière à travers le produit.*

Connect the Power Wires - TS-MPPT-60-600V-48

WARNING: Shock Hazard
The solar PV power source can produce open-circuit voltages in excess of 500 Vdc when in sunlight. Verify that the solar input breaker or disconnect has been opened (disconnected) before installing the system wires.

AVERTISSEMENT : Risque de décharge électrique
Le réseau PV solaire peut produire des tensions de circuit ouvert supérieures à 500 V cc à la lumière du soleil. Vérifiez que le coupe-circuit ou l'interrupteur d'entrée solaire a été ouvert (déconnexion) avant d'installer les câbles du système.

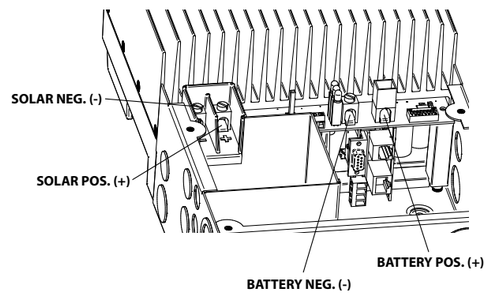

Figure 3-14. Power Terminal Locations

Connect the four (4) power conductors shown in Figure 3-14 as described in the following steps:

1. Confirm that the system input and output disconnect switches are both turned off before connecting the power wires to the controller.
2. Pull PV and battery wires into the standard wiring box. The Remote Temperature Sensor (RTS) and Battery Sense wires can be routed inside conduit along with the battery power conductors if required. The RTS and Battery Sense wires CANNOT be routed in the same conduit with the high voltage solar conductors. It is easier to pull the RTS and Sense wires before the power cables.
3. Only route high voltage solar circuit conductors in the high voltage wiring zone and low voltage battery and network conductors within the low voltage zone. Refer to section 3.2 for more information.
4. Replace the yellow Solar Terminal Bridge if removed as shown in Figure 3-9 on page 25. The bridge should fit over the solar power terminals. The bridge isolates the high voltage solar wiring from the low voltage wiring area. The bridge MUST be installed before proceeding. Connect the solar (+) wire to the solar (+) terminal on the TriStar MPPT 600V.

WARNING: Risk of Damage
Be very certain that the solar connection is made with correct polarity. Turn on the solar power source breaker/disconnect and measure the voltage on the open wires BEFORE connecting to the TriStar MPPT 600V. Disconnect the solar breaker/disconnect before wiring to the controller.

***AVERTISSEMENT** : Risque d'endommagement*
Assurez-vous que la connexion solaire est effectuée avec la polarité correcte. Activez le coupe-circuit/interrupteur de réseau solaire et mesure la tension sur les câbles ouverts AVANT la connexion au TriStar MPPT 600V. Déconnectez le coupe-circuit/interrupteur solaire avant le câblage sur le contrôleur.

***NOTE:** Tighten all new screw terminal connections to specified torque values*

***REMARQUE :** Serrer toutes les nouvelles connexions terminal vis au couple spécifié de valeurs*

5. Connect the solar (-) wire to the solar (-) terminal on the TriStar MPPT 600V.
6. Replace the Wiring Divider (removed in Step 2 on page 24) over the solar wires, and secure it with the M4 screw provided.

WARNING: Risk of Damage
Be very certain that the battery connection is made with correct polarity. Turn on the battery breaker/disconnect and measure the voltage on the open battery wires BEFORE connecting to the TriStar MPPT 600V. Disconnect the battery breaker/disconnect before wiring to the controller.

AVERTISSEMENT : Risque d'endommagement
Assurez-vous que la connexion a la batterie est effectuée avec la polarité correcte. Activez le coupe-circuit/interrupteur de la batterie et mesure la tension sur les câbles ouverts AVANT la connexion au TriStar MPPT 600V. Déconnectez le coupe-circuit/interrupteur de la batterie avant le câblage sur le contrôleur.

7. Connect the battery (+) wire to the battery (+) terminal on the TriStar MPPT 600V. The battery (+) terminal has a red cover. See Figure 3-14.
8. Connect the battery (-) wire to the battery (-) terminal on the TriStar MPPT 600V. See Figure 3-14.
9. Replace cover, and secure with four (4) screws.
10. Connect the TriStar MPPT 600V battery (+) wire (using a properly sized inline external breaker at the battery) to the system battery (+) post; then connect the battery (-) wire to the system battery (-) post (system battery not shown).

Connect the Power Wires - TS-MPPT-60-600V-48-DB

WARNING: Shock Hazard
The solar PV power source can produce open-circuit voltages in excess of 500 Vdc when in sunlight. Verify that the solar input breaker or disconnect has been opened (disconnected) before installing the system wires.

AVERTISSEMENT : Risque de décharge électrique
Le réseau PV solaire peut produire des tensions de circuit ouvert supérieures à 500 V cc à la lumière du soleil. Vérifiez que le coupe-circuit ou l'interrupteur d'entrée solaire a été ouvert (déconnexion) avant d'installer les câbles du système.

WARNING: Risk of Damage
Be very certain that the battery connection is made with correct polarity. Turn on the battery breaker/disconnect and measure the voltage on the open battery wires BEFORE connecting to the TriStar MPPT 600V. Disconnect the battery breaker/disconnect before wiring to the controller.

AVERTISSEMENT : Risque d'endommagement
Assurez-vous que la connexion a la batterie est effectuée avec la polarité correcte. Activez le coupe-circuit/interrupteur de la batterie et mesure la tension sur les câbles ouverts AVANT la connexion au TriStar MPPT 600V. Déconnectez le coupe-circuit/interrupteur de la batterie avant le câblage sur le contrôleur.

WARNING: Risk of Damage
Be very certain that the solar connection is made with correct polarity. Turn on the solar power source breaker/disconnect and measure the voltage on the open wires BEFORE connecting to the TriStar MPPT 600V. Disconnect the solar breaker/disconnect before wiring to the controller.

AVERTISSEMENT: *Risque d'endommagement*
Assurez-vous que la connexion solaire est effectuée avec la polarité correcte. Activez le coupe-circuit/ interrupteur de réseau solaire et mesure la tension sur les câbles ouverts AVANT la connexion au TriStar MPPT 600V. Déconnectez le coupe-circuit/interrupteur solaire avant le câblage sur le contrôleur.

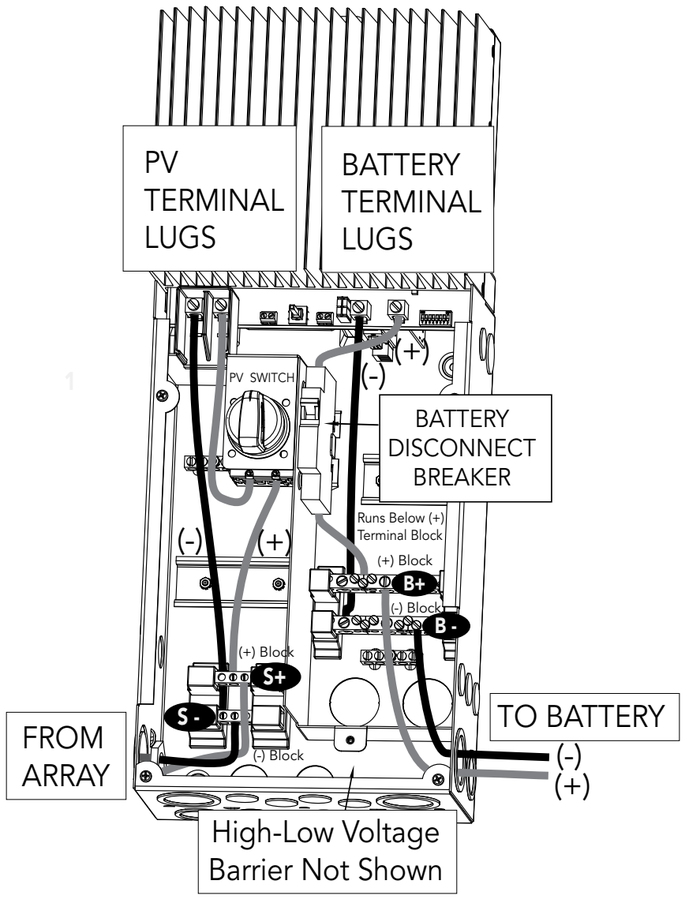

Figure 3-15. Power Terminal Locations

Connect the four (4) power conductors shown in Figure 3-15 as described in the following steps:

1. Confirm that the system solar and battery disconnect switches are both OPEN (disconnected) before connecting the power wires to the controller.
2. Pull solar and battery wires into the Disconnect Box (DB). The Remote Temperature Sensor (RTS) and Battery Sense wires can be routed inside conduit with the battery power conductors, if required. Unless rated for 600V, the RTS and Battery Sense wires CANNOT be routed in the same conduit with the high voltage solar conductors. It is easier to pull the RTS and BVS wires before the power cables.

3. Only route high voltage solar circuit conductors in the high voltage wiring zone and low voltage battery and network conductors within the low voltage zone. Refer to section 3.2 for more information.

WARNING: Risk of Damage
Be very certain that the battery connection is made with correct polarity, otherwise, damage will occur.. *Turn on the battery breaker/disconnect and measure the voltage on the open battery wires BEFORE connecting to the TriStar MPPT 600V. Disconnect the battery breaker/disconnect before wiring to the controller.*

AVERTISSEMENT : Risque d'endommagement
Assurez-vous que la connexion a la batterie est effectuée avec la polarité correcte. dans le cas contraire, subira des dommages. Activez le coupe-circuit/interrupteur de la batterie et mesure la tension sur les câbles ouverts AVANT la connexion au TriStar MPPT 600V. Déconnectez le coupe-circuit/interrupteur de la batterie avant le câblage sur le contrôleur.

WARNING: Risk of Damage
Be very certain that the solar connection is made with correct polarity, otherwise, damage will occur.. *Turn on the solar power source breaker/disconnect and measure the voltage on the open wires BEFORE connecting to the TriStar MPPT 600V. Open the solar breaker/disconnect before wiring to the controller.*

AVERTISSEMENT: *Risque d'endommagement*
Assurez-vous que la connexion solaire est effectuée avec la polarité correcte, dans le cas contraire, subira des dommages. . Activez le coupe-circuit/interrupteur de réseau solaire et mesure la tension sur les câbles ouverts AVANT la connexion au TriStar MPPT 600V. Déconnectez le coupe-circuit/ interrupteur solaire avant le câblage sur le contrôleur.

NOTE: *Tighten all new screw terminal connections to specified torque values*

REMARQUE : *Serrer toutes les nouvelles connexions terminal vis au couple spécifié de valeurs*

4. IMPORTANT: Tighten all factory pre-wired screw terminal connections to specified torque values.
5. Connect the battery (+) wire to an available terminal on the battery (+) block as in (B+), and then connect the battery (-) wire to an available terminal on the battery (-) block as in (B-).
6. Connect the TriStar MPPT 600V battery (+) wire (using a properly sized inline external breaker, if required by code) at the battery, to the system battery (+) post; then connect the battery (-) wire to the system battery (-) post (system battery not shown).
7. Connect the solar (+) wire to an available terminal on the solar (+) block as in (S+), and connect the solar (-) wire to an available terminal on the solar (-) block as in (S-).
8. Replace the Wiring Divider (removed in Step 2 on page 24) over the solar wires, and secure it with the M4 screw provided.

Step 7 - Remote Temperature Sensor

The included Remote Temperature Sensor (RTS) is recommended for effective temperature compensated charging. Connect the RTS to the 2-position terminal located between the push-button and the LEDs (see figure 2-1 on p. 13). The RTS is supplied with 33 ft (10 m) of 22 AWG (0.34 mm^2) cable. There is no polarity, so either wire (+ or -) can be connected to either screw terminal. The RTS cable may be pulled through conduit along with the power wires. Tighten the connector screws to 5 in-lb (0.56 Nm) of torque. Separate installation instructions are provided inside the RTS bag.

WARNING: Risk of Fire.
If no Remote Temperature Sensor (RTS) is connected, use the TriStar MPPT 600V within 3m (10 ft) of the batteries. Internal Temperature Compensation will be used if the RTS is not connected. Use of the RTS is strongly recommended.

AVERTISSEMENT: Risque d'incendie.
Si non Capteur de température distant (RTS) est connecté, utilisez le MPPT ProStar moins de 3m (10 pi) de les batteries. Compensation de la température interne sera utilisée si la RTS n'est pas connecté. Utilisation de la RTS est fortement recommandé.

CAUTION:
The TriStar MPPT 600V will not temperature compensate charging parameters if the RTS is not used.

CAUTION: Equipment Damage
Never place the temperature sensor inside a battery cell. Both the RTS and the battery will be damaged.

NOTE:
The RTS cable may be shortened if the full length is not needed. Be sure to reinstall the ferrite choke on the end of the RTS if a length of cable is removed. This choke ensures compliance with electromagnetic emissions standards.

PRUDENCE :
Le TriStar MPPT 600V 600Vne compense pas la température des paramètres de charges si le RTS n'est pas utilisé.

PRUDENCE : Endommagement de l'équipement
Ne placez jamais la sonde de température dans un élément de batterie. Le RTS et la batterie seraient endommagés.

REMARQUE :
Le câble de RTS peut être raccourci si la totalité de la longueur n'est pas nécessaire. Assurez-vous de réinstaller la bobine en ferrite sur l'extrémité du RTS si une longueur de câble est enlevée. Cette bobine assure la conformité avec les normes d'émissions électromagnétiques.

Step 8 - Battery Voltage Sense

The voltage at the battery connection on the TriStar MPPT 600V may differ slightly from the voltage directly at the battery bank terminals due to connection and cable resistance. The *Battery Voltage Sense (BVS)* connection enables the TriStar MPPT 600V to measure the battery terminal voltage precisely with small gauge wires that carry very little current, and thus have no voltage drop. Both BVS wires are connected to the TriStar at the 2-position terminal indicated by #16 in Figure 2-1, on p. 13. No damage will occur if the polarity is reversed, but the controller cannot read a reversed sense voltage. Connecting the BVS wires to the RTS terminal will cause an alarm. If a TriStar meter is installed, check the "TriStar Settings" to confirm the BVS and the RTS (if installed) are both present and detected by the controller. MSView™ PC software can also be used to confirm the BVS is working correctly.

A BVS connection is not required to operate your TriStar MPPT 600V controller, but it is recommended for best performance. If a TriStar meter will be added to the controller, the battery voltage sense will ensure that the voltage and diagnostic displays are very accurate. The BVS wires should be cut to length as required to connect the battery to the voltage sense terminal. The wire size can range from 16 to 24 AWG (1.0 to 0.25 mm^2). A twisted pair cable is recommended but not required. Use UL rated 300 Volt conductors. The BVS wires may be pulled through conduit with the power conductors. Tighten the connector screws to 5 in-lb (0.56 Nm) of torque.

The maximum length allowed for each BVS wire is 98 ft (30 m).

Be careful to connect the battery positive (+) terminal to the voltage sense positive (+) terminal.

3.8 Configuration

Step 9 - Adjust Settings Switches

Switch 1: Future Use
Select the charging source that will be connected to the TriStar MPPT 600V.

Mode	Switch 1
Solar Charging	OFF
Future Use	ON

Switch 2: Not Used (OFF)

Switch 3: Charging Mode

Charging Mode	Switch 3
Normal 48V	OFF
Custom Multiplier*	ON

* Allows for nominal charging voltages of 24, 36, or 60V. Battery compatibility must be verified.

Switches 4, 5, & 6: Battery Charging Settings

It is important to select the battery type that matches the system battery to ensure proper charging and long battery life. Refer to the specifications provided by the battery manufacturer and choose a setting that best fits the recommended charging profile.

Settings Switches 4 - 5 - 6	Battery Type	Absorp. Stage (Volts)	Float Stage (Volts)	Equalize Stage (Volts)	Equalize Interval (Days)
off-off-off	1 - Gel	56.00	54.80		
off-off-on	2 - Sealed*	56.60	54.80	57.60	28
off-on-off	3 - Sealed*	57.20	54.80	58.40	28
off-on-on	4 - AGM/Flooded	57.60	54.80	60.40	28
on-off-off	5 - Flooded	58.40	54.00	61.20	28
on-off-on	6 - Flooded	58.80	54.00	61.60	28
on-on-off	7 - L-16	61.60	53.60	64.00	14
on-on-on	8 - Custom	Custom	Custom	Custom	Custom

** "Sealed" battery type includes gel and AGM batteries*

All settings are for 48 volt nominal systems. Descriptions of battery type and stages are provided below. See section 4.2 for full details.

Battery Type - The most common battery type associated with the specified charging settings.

Absorption Stage - This stage limits input current so that the Absorption voltage is maintained. As the battery becomes more charged, the charging current continues to taper down until the battery is fully charged.

Float Stage - When the battery is fully charged, the charging voltage will be reduced to the Float voltage setting.

Equalize Stage - During an equalization cycle, the charging voltage will be held constant at the specified voltage setting.

Equalize Interval - The number of days between equalization charges when the controller is configured for automatic equalizations (settings switch 7).

Switch 7: Battery Equalization

Choose between manual and automatic battery equalization charging. In the manual equalization setting, an equalization will only occur when manually started with the push-button or when requested from the equalize menu on the TriStar meter. Automatic equalization will occur according to the battery program specified by settings switches 4, 5, & 6 in the previous step.

In both settings (auto and manual), the push-button can be used to start and stop battery equalization. If the selected battery charging setting does not have an equalization stage, an equalization will never occur, even if requested manually.

Equalize	Switch 7
manual	OFF
automatic	ON

Switch 8: Ethernet Security

The Ethernet Security switch enables or disables configuration of the TriStar MPPT 600V settings through the Ethernet connection. When switch 8 is set to *disabled*, write commands to the TriStar MPPT 600V custom memory are not allowed through the Ethernet connection. This safety feature will prevent unintended changes to custom settings, but it is not a substitute for proper network security.

Configuration via TCP/IP	Switch 8
disabled	OFF
enabled	ON

NOTE:
Adjustment of network settings and custom set-points is always enabled via the RS-232 and EIA-485 connections. The Ethernet Security switch only enables/disables remote configuration via TCP/IP.

CAUTION: Risk of Tampering
The Ethernet Security settings switch does not block write commands to devices bridged via EIA-485.

REMARQUE :
Le réglage des paramètres de réseau et des points de consignes personnalisés est toujours activé par les connexions RS-232 et EIA-485. Le contacteur de sécurité Ethernet n'active/désactive que la configuration à distance par TCP/IP.

PRUDENCE : Risque de tentative d'altération
Le contacteur des paramètres de sécurité Ethernet ne bloque pas les commandes d'écriture sur les dispositifs reliés par EIA-485.

Step 10 - Grounding and Ground-Fault Interruption

WARNING:
This unit is not provided with a GFDI device. This charge controller must be used with an external GFDI device as required by the Article 690 of the U.S. National Electrical Code for the installation location.

AVERTISSEMENT :
L'appareil n'est pas fourni avec un dispositif GFDI. Ce contrôleur de charge doit être utilisé avec un dispositif GFDI externe tel que requis par l'Article 690 du Code électrique national de la région de l'installation.

NOTE:
Conductors identified by the color combination green/yellow shall only be used for earthing conductors.

Use a copper wire to connect the grounding terminal in the wiring box - and any other dead metallic components - to earth ground. Per NEC 690.45 and NEC Table 250.122, minimum size for copper grounding wire are:

TriStar MPPT 600V unit - 60A: 10 AWG (8 mm^2)

OR, of the same, or greater, cross-sectional area as the PV wires.

The grounding terminal is identified by the ground symbol adjacent to the terminal and shown below:

Do not connect the system negative conductor to this terminal. NEC requires the use of an external ground fault protection device (GFPD). The TriStar MPPT 600V does not have internal ground fault protection, but Morningstar Corporation offers an accessory GFPD-600V. The system electrical negative should be bonded through a GFPD to earth ground at one (and only one) location. The grounding point may be located in the solar circuit or the battery circuit.

WARNING: Risk of Fire
DO NOT bond system electrical negative to earth ground at the controller. Per NEC requirements, system negative must be bonded to earth ground through a GFPD at only one point.

AVERTISSEMENT : Risque d'incendie
NE LIEZ PAS le côté négatif du système à la mise à la terre au niveau du contrôleur. Selon les exigences du CNE, le côté négatif du système doit être mis à la terre par un GFPD à un seul point.

3.9 Power-up and Commissioning

Step 11 - Power Up (TS-MPPT-60-600V-48 and TS-MPPT-60-600V-48-DB)

WARNING: Risk of Damage
Connecting the solar power source to the battery terminal will permanently damage the TriStar MPPT 600V.

WARNING: Risk of Damage
Connecting the solar power source or battery connection with reverse polarity will permanently damage the TriStar MPPT 600V.

AVERTISSEMENT: Risque d'endommagement
La connexion du réseau solaire sur la borne de la batterie endommagera le TriStar MPPT 600V 600Vde façon permanente.

AVERTISSEMENT: Risque d'endommagement
La connexion du réseau solaire ou la connexion de la batterie avec une polarité inversée endommagera le TriStar MPPT 600V 600Vde façon permanente.

- Confirm that the solar and battery polarities are correct.
- Note that a battery must be connected to the TriStar MPPT 600V to start and operate the controller. The controller will not operate only from solar input.
- Close the battery disconnect breaker (DB or external) first. Observe that the LEDs indicate a successful start-up. (LEDs blink Green - Yellow - Red in one cycle)
- Close the solar disconnect switch (DB or external). If the power source is active, the TriStar MPPT 600V will begin charging. If an optional TriStar Meter is installed, charging current will be reported along with charging state.

Power-Down

WARNING: Risk of Damage
ONLY disconnect the battery from the TriStar MPPT 600V **AFTER** *the solar input has been disconnected. Damage to the controller may result if the battery is removed while the TriStar MPPT 600V is charging.*

AVERTISSEMENT: Risque d'endommagement
Le TriStar MPPT 600V SEULEMENT déconnecter la batterie **APRÈS** *l'entrée solaire a été déconnectée. Le contrôleur pourrait endommager si la batterie est retirée quand le TriStar MPPT 600V est en charge.*

- **Per warning above: To prevent damage, power-down must be done in the reverse order as power-up.**

4.0 Operation

The TriStar MPPT 600V operation is fully automatic. After installation is completed, there are few operator tasks to perform. However, the operator should be familiar with the operation and care of the TriStar MPPT 600V as described in this section.

4.1 TrakStar™ MPPT Technology

The TriStar MPPT 600V utilizes Morningstar's TrakStar™ Maximum Power Point Tracking (MPPT) technology to extract maximum power from high voltage power sources commonly used in grid-tie applications. The tracking algorithm is fully automatic and does not require user adjustment. TrakStar™ technology tracks an power source's *maximum power point* as it varies with weather conditions, ensuring that maximum power is harvested throughout the course of the day.

Power Conversion

The power into the TriStar MPPT 600V is the same as the power out of the TriStar MPPT 600V. A system may have 5 Amps of solar current flowing into the TriStar MPPT 600V and 50 Amps of charge current flowing out to the battery. Since power is the product of voltage and current (Volts x Amps), the following is true*:

(1) Power Into the TriStar MPPT 600V = Power Out of the TriStar MPPT 600V
(2) Volts In x Amps In = Volts Out x Amps Out

* assuming 100% efficiency -- wiring and conversion losses neglected.

If the solar module's *maximum power voltage* (V_{mp}) is greater than the battery voltage, it follows that the battery current must be proportionally greater than the solar input current so that input and output power are balanced. The greater the difference between the V_{mp} and battery voltage, the greater the current "boost". Current boost can be substantial in systems where the power source is of a higher nominal voltage than the battery as described in the next section.

High Voltage Strings and Grid-Tie Modules

Another benefit of TrakStar™ MPPT technology is the ability to charge batteries with power sources of higher nominal voltages. The TriStar MPPT 600V charges a 48 Volt battery bank with a high voltage power source. The power source *open-circuit voltage* (V_{oc}) rating must not exceed the 600 Volt maximum input voltage rating at worst-case (coldest) module temperature. The solar module documentation should provide V_{oc} vs. temperature data.

Higher solar input voltage results in lower solar input current for a given input power. High voltage solar input strings allow for smaller gauge solar wiring. This is especially helpful and economical for systems with long wiring runs between the controller and the power source.

4.2 Battery Charging Information

4-Stage Charging

The TriStar MPPT 600V has a 4-stage battery charging algorithm for rapid, efficient, and safe battery charging. Figure 4-1 shows the sequence of the stages.

NOTE:
Array voltage must be greater than 100 Volts for charging to start

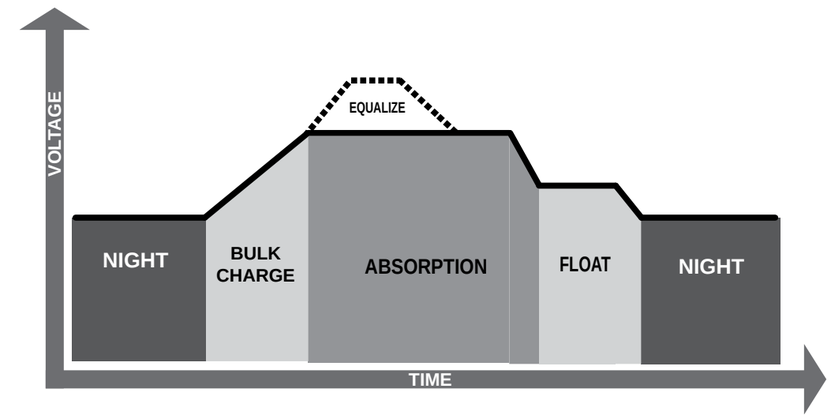

Figure 4-1 TriStar MPPT 600V Charging Algorithm

Bulk Charge Stage

During Bulk charging, the battery is not at 100% state of charge and battery voltage has not yet charged to the Absorption voltage set-point. The controller will deliver 100% of available solar power to recharge the battery.

Absorption Stage

When the battery has recharged to the Absorption voltage set-point, constant-voltage regulation is used to maintain battery voltage at the Absorption set-point. This prevents heating and excessive battery gassing. The battery is allowed to come to full state of charge at the Absorption voltage set-point. The green SOC LED will blink once per second during Absorption charging.

The battery must remain in the Absorption charging stage for a cumulative 120 - 150 minutes, depending on battery type, before transition to the Float stage will occur. However, Absorption time will be extended by 30 minutes if the battery discharges below 50 Volts the previous night.

The Absorption set-point is temperature compensated if the RTS is connected.

Float Stage

After the battery is fully charged in the Absorption stage, the TriStar MPPT 600V reduces the battery voltage to the Float voltage set-point. When the battery is fully recharged, there can be no more chemical reactions and all the charging current is turned into heat and gassing. The float stage provides a very low rate of maintenance charging while reducing the heating and gasing of a fully charged battery. The purpose of float is to protect the battery from long-term overcharge. The green SOC LED will blink once every two (2) seconds during Float charging.

Once in Float stage, loads can continue to draw power from the battery. In the event that the system load(s) exceed the solar charge current, the controller will no longer be able to maintain the battery at the Float set-point. Should the battery voltage remain below the Float set-point for a cumulative 60 minute period, the controller will exit Float stage and return to Bulk charging.

The Float set-point is temperature compensated if the RTS is connected.

Equalize Stage

WARNING: Risk of Explosion
Equalizing vented batteries produces explosive gases. The battery bank must be properly ventilated.

CAUTION: Equipment Damage
Equalization increases the battery voltage to levels that may damage sensitive DC loads. Verify all system loads are rated for the temperature compensated Equalize voltage before beginning an Equalization charge.

CAUTION: Equipment Damage
Excessive overcharging and gassing too vigorously can damage the battery plates and cause shedding of active material from the plates. An equalization that is too high or for too long can be damaging. Review the requirements for the particular battery being used in your system.

AVERTISSEMENT : Risque d'explosion
Les batteries à évent et compensation produisent des gaz explosifs. Le groupe de batteries doit être correctement ventilé.

PRUDENCE : Endommagement de l'équipement
La compensation augmente la tension des batteries à des niveaux pouvant endommager les charges sensibles en CC. Vérifiez que toutes les charges du système sont conçues pour la tension de compensation par température avant de commencer une charge de compensation.

PRUDENCE : Endommagement de l'équipement
Une surcharge excessive et un dégagement gazeux trop vigoureux peuvent endommager les plaques de batteries et provoquer l'élimination du matériau actif des plaques. Une compensation trop élevée ou trop longue peut provoquer des dégâts. Examinez les exigences pour la batterie particulière utilisée dans votre système.

Certain battery types benefit from a periodic boost charge to stir the electrolyte, level the cell voltages, and complete the chemical reactions. Equalize charging raises the battery voltage above the standard absorption voltage so that the electrolyte gasses. The green SOC LED will blink rapidly two (2) times per second during equalization charging.
The duration of the equalize charge is determined by the selected battery type. See table 4-1 in this section for more details. The *Equalization Time* is defined as time spent at the equalize set-point. If there is insufficient charge current to reach the equalization voltage, the equalization will terminate after an additional 60 minutes to avoid over gassing or heating the battery. If the battery requires more time in equalization, an equalize can be requested using the TriStar Meter or pushbutton to continue for one or more additional equalization cycles.

The Equalize set-point is temperature compensated if the RTS is connected.

When to Equalize
The ideal frequency of equalizations depends on the battery type (lead-calcium, lead-antimony, etc.), the depth of discharging, battery age, temperature, and other factors. One very broad guide is to equalize flooded batteries every 1 to 3 months or every 5 to 10 deep discharges. Some batteries, such as the L-16 group, will need more frequent equalizations.

The difference between the highest cell and lowest cell in a battery can also indicate the need for an equalization. Either the specific gravity or the cell voltage can be measured. The battery manufacturer can recommend the specific gravity or voltage values for your particular battery.

Why Equalize?
Routine equalization cycles are often vital to the performance and life of a battery - particularly in a solar system. During battery discharge, sulfuric acid is consumed and soft lead sulfate crystals form on the plates. If the battery remains in a partially discharged condition, the soft crystals will turn into hard crystals over time. This process, called "lead sulfation," causes the crystals to become harder over time and more difficult to convert back to soft active materials.

Sulfation from chronic undercharging of the battery is the leading cause of battery failures in solar systems. In addition to reducing the battery capacity, sulfate build-up is the most common cause of buckling plates and cracked grids. Deep cycle batteries are particularly susceptible to lead sulfation.

Normal charging of the battery can convert the sulfate back to the soft active material if the battery is fully recharged. However, a solar battery is seldom completely recharged, so the soft lead sulfate crystals harden over a period of time. Only a long controlled overcharge, or equalization, at a higher voltage can reverse the hardening of sulfate crystals.

Preparation for Equalization

First, confirm that all of the system loads are rated for the equalization voltage. Consider that at 0°C (32°F) the equalization voltage will reach 67.00 Volts for L-16 batteries with a temperature sensor installed. Disconnect any loads at risk of damage due to the high input voltage.

If Hydrocaps are used, be sure to remove them before starting an equalization. Replace the Hydrocaps with standard battery cell caps. The Hydrocaps can get very hot during an equalization. Also, if Hydrocaps are used, the equalization should be set for manual only (DIP switch #7 is Off).

After the equalization is finished, add distilled water to each cell to replace gasing losses. Check that the battery plates are covered.

Equalize a Sealed Battery?

The *Battery Charging Settings* table (see table 4-1 in this section) shows one sealed battery setting with an Equalization cycle. This is only a 0.4 Volt boost cycle to level individual cells. This is not an equalization, and will not vent gas from sealed batteries that require up to 57.60 V charging (48 V battery). Many VRLA batteries, including AGM and gel, have charging requirements up to 57.6 V (48 V battery). This "boost" charge for sealed cells can be disabled by setting the equalize setting switch to manual if required.

Battery Charging Settings

The details of the TriStar MPPT 600V battery charging settings are shown in tables 4-1 and 4-2 below. All voltage settings listed are for nominal 48 Volt battery banks.

Settings Switches 4 - 5 - 6	Battery Type	Absorp. Stage (Volts)	Float Stage (Volts)	Equalize Stage (Volts)	Absorp. Time (Minutes)	Equalize Time (Minutes)	Equalize Interval (Days)
off-off-off	1 - Gel	56.00	54.80		150		
off-off-on	2 - Sealed*	56.60	54.80	57.60	150	60	28
off-on-off	3 - Sealed*	57.20	54.80	58.40	150	60	28
off-on-on	4 - AGM/Flooded	57.60	54.80	60.40	180	120	28
on-off-off	5 - Flooded	58.40	54.00	61.20	180	120	28
on-off-on	6 - Flooded	58.80	54.00	61.60	180	180	28
on-on-off	7 - L-16	61.60	53.60	64.00	180	180	14
on-on-on	8 - Custom	Custom	Custom	Custom	Custom	Custom	Custom

** "Sealed" battery type includes gel and AGM batteries*

Table 4-1. Battery charging settings for each selectable battery type

Shared Settings	Value	Units
Absorption Extension Voltage	50.00	Volts
Absorption Extension Time	Absorption Time + 30	minutes
Float Exit Time-out	60	minutes
Float Cancel Voltage	49.20	Volts
Equalize Time-out	Equalize Time + 60	minutes
Temperature Compensation Coefficient*	- 5	millivolts / °C / cell

** 25°C reference*

Table 4-2. Battery settings that are shared between all battery types

The TriStar MPPT 600V provides seven (7) standard battery charging settings that are selected with the settings switches (see Step 9 in the Installation Section). These standard charging settings are suitable for lead-acid batteries ranging from sealed (gel, AGM, maintenance-free) to Flooded and L-16 cells. In addition, an 8th charging setting provides for custom set-points using MSView™ PC software. Table 4-1 above summarizes the major parameters of the standard charging settings.

The shared settings in table 4-2 are common to all battery types. The following charging profiles graphically explain the shared settings:

Absorption Extension

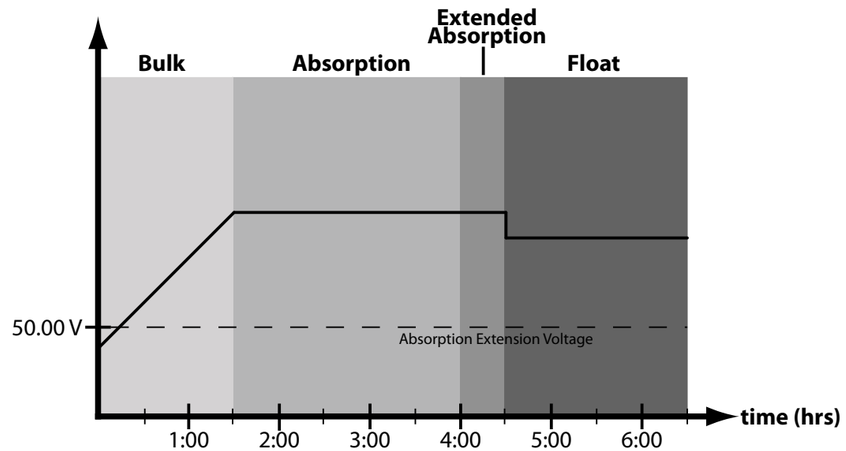

Figure 4-2. Absorption extension charging profile.

If battery voltage discharges below 50.00 Volts the previous night, Absorption charging will be extended on the next charge cycle as shown in figure 4-2 above. 30 minutes will be added to the normal Absorption duration.

Float Time-Out

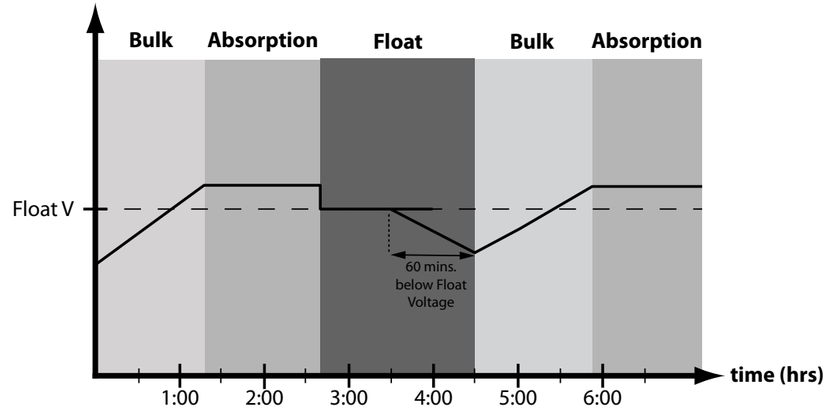

Figure 4-3. Float exit time-out charging profile

After entering Float stage, the controller will only exit Float if the battery voltage remains below Float voltage for 60 cumulative minutes. In figure 4-3, a system load turns on at 3:30 hrs when the controller is in Float stage, and runs for one hour, until 4:30 hrs. The load current draw is larger than the charge current, causing battery voltage to drop below Float voltage for 60 minutes. At that point, the controller returns to Bulk charging, and then Absorption stage once again. In this example, a load runs continuously for 60 min. However, because the Float exit timer is cumulative, multiple momentary load events that pull the battery voltage below Float voltage for a combined 60 minutes duration will also force an exit from the Float stage.

Float Cancel Voltage

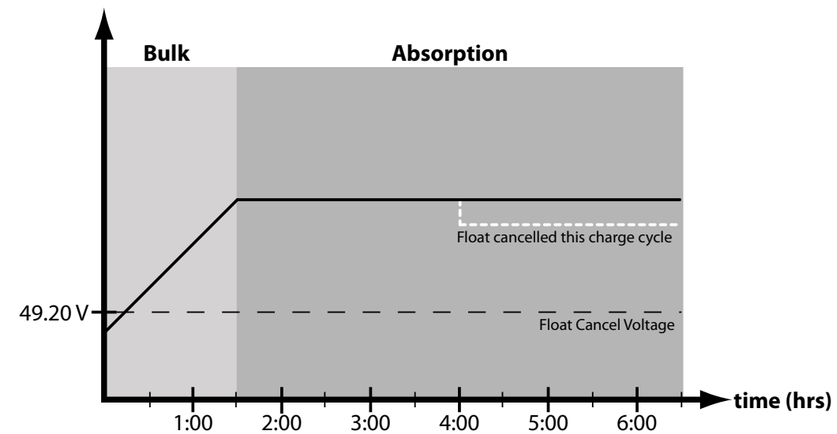

Figure 4-4. Float cancelled charging profile

If the battery bank discharges below 49.20 Volts the previous night, Float charging stage will be cancelled for the next charge cycle. Figure 4-4 above illustrates this concept. At 0:00 hrs (dawn), battery voltage is below the Float Cancel threshold voltage. The diagram shows where Float stage would have occurred if Float was not cancelled.

Equalize Time-Out

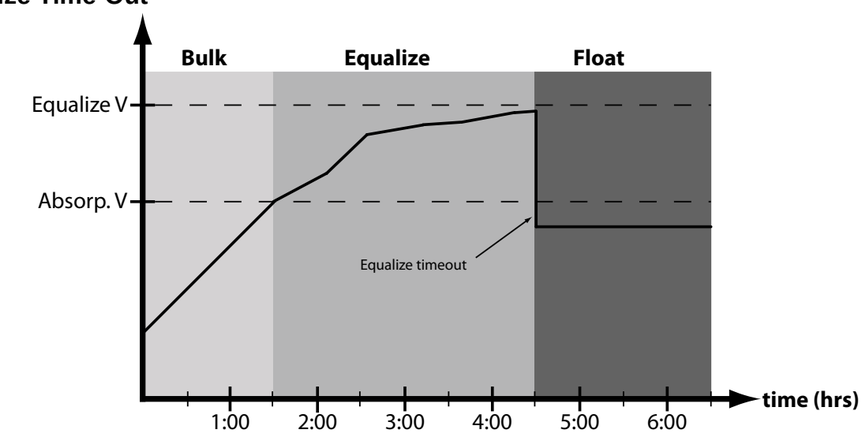

Figure 4-5. Equalize time-out charging profile

The charging profile in figure 4-5 shows an *Equalize Time-out* event. The time-out timer begins as soon as battery voltage exceeds the Absorption voltage set-point. If there is insufficient charging current or system loads are too large, the battery voltage may not reach the Equalize set-point. Equalize Time-out is a safety feature that prevents high battery voltage for extended periods of time which may damage the battery.

Temperature Compensation

All charging settings are based on 25°C (77°F). If the battery temperature varies by 5°C, the charging setting will change by 0.60 Volts for a 48 Volt battery. This is a substantial change in the charging of the battery, and the use of the Remote Temperature Sensor (RTS) is recommended to adjust charging to the actual battery temperature.

The need for temperature compensation depends on the temperature variations, battery type, how the system is used, and other factors. If the battery appears to be gassing too much or not charging enough, the RTS can be added at any time after the system has been installed. See Section 3.4 - Step 7 for installation instructions.

Battery Sense

Voltage drops are unavoidable in power cables that carry current, including the TriStar MPPT 600V battery cables. If Battery Sense wires are not used, the controller must use the voltage reading at the battery power terminals for regulation. Due to voltage drops in the battery cables, the battery power connection voltage will be higher than the actual battery bank voltage while charging the battery.

Two sense wires, sized from 1.0 to 0.25 mm^2 (16 to 24 AWG), can be used for battery voltage sense. Because these wires carry no current, the voltage at the TriStar will be identical to the battery voltage. A 2-position terminal is used for the battery sense connection.

Generally accepted wiring practice is to limit voltage drops between the charger and the battery to 2%. Even properly sized wiring results in significant voltage drop that can impact charging. The controller will begin Absorption or limit equalization at a lower battery voltage because the voltage at the controller's terminals is higher than the actual battery voltage.

Note that the battery sense wires will not power the controller, and the sense wires will not compensate for losses in the power wires between the controller and the battery. The battery sense wires are only used to improve the accuracy of the battery charging.

See Section 3.4 - Step 8 for instructions on how to connect the battery sense wires.

4.3 Push-button

The following functions can be enabled with the pushbutton (located on the front cover):

PUSH

- Reset from certain errors or faults.
- Reset the battery service indication if this has been activated in custom settings. A new service period will be started, and the flashing LEDs will stop blinking. If the battery service is performed before the LEDs begin blinking, the pushbutton must be pushed at the time when the LEDs are blinking to reset the service interval and stop the blinking.

PUSH AND HOLD 5 SECONDS

- Request battery equalization manually. The TriStar MPPT 600V will begin equalization in either the manual or automatic equalization mode. Equalization will begin when there is sufficient solar power to charge the battery up to the equalization voltage. The LEDs will blink the sequence defined in table 4-3 below to confirm that an equalize has been requested. The equalization request will automatically stop per the battery type selected (see Section 4.2). Equalization will only occur if the selected battery type has an equalization stage.
- Stop an equalization that is in progress. This will be effective in either the manual or automatic mode. The equalization will be terminated. The LEDs will blink to confirm the equalize has been cancelled as shown in table 4-3 below.

Push-Button Action	SOC LED Indication
Manual Equalization Started	Green / Yellow / Red - Green / Yellow / Red - Green - Green
Stop Equalization	Green / Yellow / Red - Green / Yellow / Red - Red - Red

Table 4-3. Manual Equalization LED Indcations

NOTE:
For multiple TriStar MPPT 600V controllers on a MeterBus™ network, initialize a battery equalization using the TriStar meter so that all controllers are synchronized.

REMARQUE :
Avec plusieurs contrôleurs TriStar MPPT 600V 600Vsur un réseau MeterBusTM, initialisez une compensation de batteries à l'aide de l'outil de mesure TriStar afin de synchroniser tous les contrôleurs.

Note that if two or more TriStar MPPT 600V controllers are charging in parallel, each controller may attempt to equalize on a different day. Systems with multiple controllers should only equalize manually to ensure synchronization between controllers.

4.4 LED Indications

Valuable information is provided by the three LEDs visible through the front cover. Although there are many different LED indications, they have similar patterns to make it easier to interpret each LED display. Consider as three groups of indications: General Transitions // Battery Status // Faults & Alarms.

LED Display Explanation

G = green	G - Y - R	= flashing sequentially
Y = yellow	G / Y	= flashing together
R = red	R / Y - G	= Red and yellow flashing together, sequencing with G flash

Sequencing LED patterns (faults) repeat until the fault is cleared

General Transitions

- Controller start-up — G - Y - R (one cycle)
- Equalize request start — G / Y / R - G / Y / R - G - G
- Equalize cancelled — G / Y / R - G / Y / R - R - R
- Battery service is required* — All 3 LEDs blinking until service is reset

**battery service notification is only enabled in custom settings*

Battery Status

- General state-of-charge — see battery SOC indications below
- Absorption — G blinking (once per second)
- Equalization state — G fast blink (two times per second)
- Float state — G slow blink (once per two seconds)

Faults & Alarms

- Over-temperature — Y - R sequencing
- High voltage disconnect — G - R sequencing
- DIP switch fault — R - Y - G sequencing
- Self-test faults — R - Y - G sequencing
- Remote Temperature Sensor (RTS) — G / Y - Y / R sequencing
- Battery voltage sense — G / Y - Y / R sequencing
- Solar Over-Current — Y / R - G sequencing

Battery State-of-Charge LED Indications

G	80% to 95% SOC
G / Y	60% to 80% SOC
Y	35% to 60% SOC
Y / R	0% to 35% SOC
R	battery is discharging

Refer to the Specifications (Section 9.0) for the State-of-Charge voltages.
Note that because these State-of-Charge LED displays are for all battery types and system designs, they are only approximate indications of the battery charge state.

Ethernet Jack Indications

In addition to the SOC LEDs, two (2) small LEDs can be found on the Ethernet RJ-45 jack inside the wiring box. These LEDs indicate the LAN/WAN network link and activity status as follows:

Condition	Yellow LED	Green LED
Network Connection OK	ON	OFF
Network Activity	ON	Blinking
Error	OFF	ON

4.5 Protections, Faults & Alarms

The TriStar MPPT 600V protections and automatic recovery are important features that ensure the safe operation of the system. Additionally, the TriStar MPPT 600V features real-time self diagnostics that report Fault and Alarm conditions as they occur.

Faults are events or conditions that require the TriStar MPPT 600V to cease operation. A Fault usually occurs when a limit such as voltage, current, or temperature has been surpassed. Fault conditions are indicated with unique LED sequences and are also displayed on a TriStar Meter, and in MSView software.

Alarms are events or conditions that may require the TriStar MPPT 600V to modify operation. Alarms are commonly used to alert the user that the controller is nearing a specific voltage, current, or temperature limit. Alarm conditions are only displayed on a TriStar Meter, and in MSView software.

Some basic fault and alarm conditions are listed below.

Protections

Solar Overload
The TriStar MPPT 600V will limit battery current to the *Maximum Battery Current* rating. See Figure 9-1 - Battery Current vs. Array Voltage de-rating graph - in Section 9.0. An over-sized power source will not operate at peak power. The power source wattage should be less than the TriStar MPPT 600V *Nominal Maximum Input Power* rating for optimal performance.

Solar High Input Voltage
As the array open-circuit voltage approaches the 600 Volt maximum input voltage limit, solar input current will be limited.

High Temperature
The TriStar MPPT 600V will limit the solar input current if the heatsink temperature exceeds safe limits. Solar charge current will be tapered back (to 0 amps if needed) to reduce the heatsink temperature.

Faults

Remote Temperature Sensor Failure (R / Y - G / Y)
If a fault in the RTS (such as a short circuit, open-circuit, loose terminal) occurs after the RTS has been working, the LEDs will indicate a failure. However, if the controller is restarted with a failed RTS, the controller may not detect that the RTS is connected, and the LEDs will not indicate a problem. A TriStar meter or the PC software can be used to determine if an RTS is detected and working properly.

Battery Voltage Sense Failure (R / Y - G / Y)
If a fault in the battery sense connection (such as a short circuit, open-circuit or loose terminal) occurs after the battery sense has been working, the LEDs will indicate a failure. If the controller is restarted with the failure still present, the controller may not detect that the battery sense is connected and the LEDs will not indicate a fault. A TriStar meter or the PC software can be used to determine if the battery sense is working properly.

Settings (DIP) Switch Changed (R - Y - G sequencing)
If a settings switch is changed while there is power to the controller, the LEDs will begin sequencing and the solar input will be disconnected. The controller must be restarted to clear the fault and begin operation with the new settings.

Battery Low Voltage Disconnect (R -Y - G sequencing)
If the battery voltage is too low, the unit will stop operation. The LED indication alerts the user that the battery is below a safe voltage. When battery voltage rises to the Battery Low Voltage Reconnect threshold, the fault will automatically clear.

Battery High Voltage Disconnect (G- R sequencing)
This fault is occurs when battery voltage is above normal operating limits. The controller will disconnect the solar input, and indicate a High Voltage Disconnect fault. This fault is commonly caused by other charging sources in the system charging the battery above the TriStar MPPT 600V regulation voltage. When the battery voltage returns to normal levels, the fault will automatically clear.

Custom Settings Edit (R - Y - G sequencing)
A value has been modified in custom settings memory. The controller will stop charging and indicate a fault condition. After all settings have been modified, the controller must be reset by removing and then restoring power to the controller. The new programmed settings will be used after the power reset.

Firmware Update Failure (start-up interrupted - stops on Y)
The firmware update was not successfully programmed. The controller will not indicate the full power-up LED sequence of G / Y / R when power to the controller is reset. Instead, the controller will display green and then stop on yellow. The yellow LED will continue to be lit and the controller will not complete start up or begin charging. Retry the firmware update. The firmware must be successfully loaded before the controller will start up. Note: the second indication of firmware update failure is that the other processor is not responding.

Solar Over-Current (Y / R - G)
While rare, if battery charging current exceeds approximately 130% of the controller's output current rating, this fault can occur. The fault is generally related to fast, large battery voltage transients (connecting a very heavy or capacitive load like an inverter) that are faster than the controller can regulate and it shuts off to protect the circuitry. The controller will automatically re-start in 10 seconds.

Alarms

High Temperature Current Limit
The TriStar MPPT 600V will limit the solar input current if the heatsink temperature exceeds safe limits. Solar charge current will be tapered back (to 0 amps if needed) to reduce the heatsink temperature. The TriStar MPPT 600V is designed to operate at full rated current at the maximum ambient temperature. This alarm indicates that there is insufficient airflow and that the heatsink temperature is approaching unsafe limits. If the controller frequently reports this alarm condition, corrective action must be taken to provide better air flow or to relocate the controller to a cooler spot.

High Input Voltage Current Limit
As the power source's Voc approaches the maximum input voltage rating, the TriStar MPPT 600V will limit battery charging current. The array Voc should never exceed the 600 Volt maximum input voltage.

Charging Current Limit
The array power exceeds the rating of the controller. This alarm indicates that the TriStar MPPT 600V is limiting battery current to the maximum rating.

RTS Open
The Remote Temperature Sensor is not connected to the controller. Use of the RTS is recommended for proper battery charging.

Heatsink Temperature Sensor Open / Shorted
The heatsink temperature sensor is damaged. Return the controller to an authorized Morningstar dealer for service.

Battery Sense Out of Range / Disconnected
A battery sense wire is disconnected. Inspect the battery sense connections. This alarm is set when the voltage at the battery sense voltage differs by more than 5 volts from the voltage at the battery terminals.

Uncalibrated
The controller was not factory calibrated. Return the controller to an authorized Morningstar dealer for service.

5.0 Networking and Communication

5.1 Introduction

The TriStar MPPT 600V provides several communication options. The TriStar MPPT 600V uses a proprietary protocol for the MeterBus™ network and the non-proprietary open standard MODBUS™ and MODBUS TCP/IP™ protocols for RS-232, EIA-485, and Ethernet networks. Additionally, HTTP, SMTP, and SNMP are supported for web page, email, and network message support. Morningstar's MSView™ PC software provides system monitoring and logging capabilities via RS-232, EIA-485, and Ethernet. MSView™ PC software is available for free on our website at:

http://support.morningstarcorp.com

Further, hardware and third party software that supports the MODBUS™ protocol can also be used to communicate with a TriStar MPPT 600V.

Multiple communication ports can be used simultaneously. For example, a TriStar MPPT 600V may be connected to a MeterBus™ network for on-site system metering, connected to the internet for remote monitoring, and connected to an EIA-485 network to bridge data from other controllers in the system to an internet connection. Note that the RS-232 and EIA-485 connections share hardware and therefore cannot be used simultaneously.

Table 5-1 below provides a summary of supported features for each communication interface.

	MeterBus	RS-232	EIA-485	Ethernet
Display system/network data on a TriStar meter	●			
Connect a TSMPPT to a Relay Driver or other MS Accessory	●			
Collect data from multiple TSMPPT HV controllers on a network	●		●	●
View and log data with MSView™ PC Software		●	●	●
View logged data stored in the TriStar MPPT 600V internal memory	●	●	●	●
Update TriStar MPPT 600V firmware		●		
Program custom settings		●	●	●
View data in a web browser				●
Email notification				●
Text Message Alerts				●
SNMP Alerts				●

Table 5-1. Communication summary

5.2 Morningstar MeterBus™

Morningstar's proprietary MeterBus™ protocol allows communication between compatible Morningstar products. Use a MeterBus™ network to:

- display select net system data for multiple TriStar / TriStar MPPT 600V 600V/ TriStar MPPT 600V systems**
- communicate with a TriStar Meter 2 -600V, a TriStar Meter 2 or TriStar Remote Meter 2
- communicate with a Relay Driver or other compatible Morningstar accessories (see section 2.5 for more details)

***A Morningstar MeterBus Hub (HUB-1) and a TriStar Meter 2 (TS-M-2), TriStar Remote Meter 2 (TS-RM-2) or a TriStar Meter 2 600V (TS-M-2-600V) are required (not included).*

A MeterBus Hub (model: HUB-1) is required for MeterBus networks containing multiple TriStar MPPT 600V controllers. The ports on the hub are electrically isolated to prevent damage in the event of broken grounds or voltage differences between controllers. Figure 5-1 below shows an example MeterBus™ network with two (2) TriStar MPPT 600V controllers and a TriStar Remote Meter 2 (TS-RM-2).

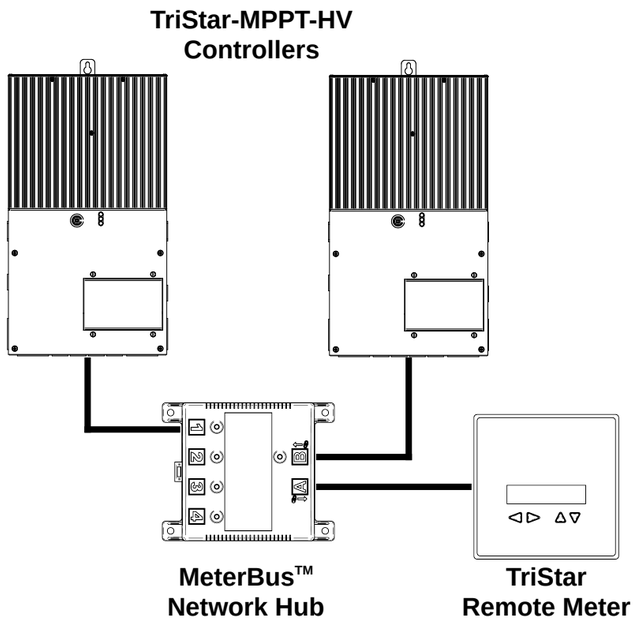

Figure 5-1. An example MeterBus network.

Up to five (5) controllers can be networked together with a single hub. Multiple hubs can be daisy-chained together to allow networks of up to (15) controllers and (2) meters.
Refer to the HUB-1 and TriStar Meter manuals for more information about Morningstar MeterBus™ networking.

5.3 Serial RS-232

The serial port connection on the TriStar MPPT 600V is a standard 9-pin isolated RS-232 port. See figure 3-5 for the port location.The TriStar MPPT 600V communicates through the serial port via the open standard MODBUS™ protocol.

Connect the TriStar MPPT 600V to the serial port on a PC to:

- program custom charge settings with MSView™ PC software
- view real-time data with MSView™ PC software
- log real-time data with MSView™ PC software
- configure Ethernet settings
- update controller firmware with MSLoad™ firmware utility

NOTE:
The RS-232 and EIA-485 ports share hardware. Both ports cannot be used simultaneously.

NOTE:
If your PC does not have a serial port, a USB to Serial cable can be purchased at your local electronics retailer. Tripp-Lite brand compatibility has been verified.

The serial connection is ideal for configuring custom settings or monitoring a single TriStar MPPT 600V controller. Figure 5-2 shows a serial connection between the controller and a PC with MSView™ PC software.

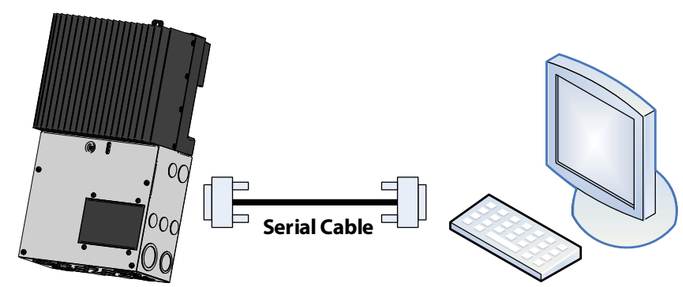

Figure 5-2. A serial connection between a PC and the TriStar MPPT 600V

Serial Port Settings

Adjust the serial port settings as follows:

- 9600 BAUD
- 8 data bits
- 1 or 2 stop bits
- no parity

The serial RS-232 connection provides a direct connection between a TriStar MPPT 600V and a PC (or other serial device). **Firmware updates can only be programmed through the RS-232 connection.** The serial connection is not typically used for multi-controller networking. However, networking is possible using a USB hub and USB-Serial cables. For more information, refer to the “Morningstar Communications Document” on our website at:

http://support.morningstarcorp.com

“What Are You Looking For”: All Documents

“Choose Product”: TS-MPPT 600V

“**GO**”, and then find listed Morningstar Communications Document

5.4 EIA-485 (formerly RS-485)

NOTE:
The RS-232 and EIA-485 ports share hardware. Both ports cannot be used simultaneously.

EIA-485 is a networking standard for serial communication between multiple devices on a bus. The TriStar MPPT 600V communicates over an EIA-485 network via the open standard MODBUS™ protocol. Use EIA-485 networking to:

- connect multiple TriStar MPPT 600V controllers on a network to log and view real-time data using MSView™ PC software
- program each controller on the network with custom charge settings using MSView™ PC software
- connect the TriStar MPPT 600V to other Morningstar controllers with the RSC-1 Serial to EIA-485 Adapter (sold separately)
- bridge an Ethernet connection through a TriStar MPPT 600V to an EIA-485 network

The EIA-485 port has four (4) connections: Power, Data A, Data B, and Ground. Data A & B are differentially driven data lines that carry the network data. Power and Ground connections provide power to the network. The TriStar MPPT 600V does not supply power to the EIA-485 network, therefore an external power source is required. The source voltage must be between 8-16 Vdc.

CAUTION: Equipment Damage
Tapping power off of individual batteries in a series string of batteries can cause a voltage imbalance. Damage to the batteries may result. Always use a DC-DC converter to power the EIA-485 network.

PRUDENCE : Endommagement de l’équipement
L’arrêt progressif de batteries individuelles dans une série de batteries peut provoquer un déséquilibre de tension. Les batteries peuvent être endommagées. Utilisez toujours un convertisseur CC-CC pour convertir l’alimentation au réseau EIA-485 si la tension nominale du système est supérieure à 12 V.

For more information on EIA-485 networking, refer to the “Morningstar Communications Document” on our website at:

http://support.morningstarcorp.com

“What Are You Looking For”: All Documents

“Choose Product”: TS-MPPT 600V

“**GO**”, and then find listed Morningstar Communications Document

5.5 Ethernet

CAUTION: Risk of Tampering
The TS-MPPT-600V does not feature built-in network security. It is the responsibility of the user or network administrator to place the TS-MPPT-600V behind a network firewall to prevent unauthorized access.

PRUDENCE : Risque de tentative d'altération
Le TS-MPPT-600V ne comporte pas de sécurité réseau intégrée. Il incombe à l'utilisateur ou à l'administrateur du réseau de placer le TS-MPPT-600V derrière un pare-feu réseau afin d'empêcher l'accès non autorisé.

The Ethernet port supports HTTP, MODBUS TCP/IP™, SMTP, and SNMP protocols to provide a fully web-enabled interface between the TriStar MPPT 600V and a LAN/WAN network or the internet.

Ethernet connections also provide the communication link between multiple TS-MPPT-600V controllers for synchronous operation. Some of the many features the Ethernet connection provides include:

- program custom settings with MSView™ PC software
- monitor the controller from a web browser
- link up to four controllers for synchronous operation
- modify controller settings from a web browser
- log and monitor the system with MSView™ PC software anywhere on the internet
- create custom web pages to show system data
- send an email or text message if a fault, alarm, or user-defined event occurs
- monitor and receive messages on an SNMP network

This section provides a summary of each of the features. For detailed information about Ethernet connectivity and networking, refer to the "*Morningstar Communications Document*" at:

http://support.morningstarcorp.com
"What Are You Looking For": All Documents
"Choose Product": TS-MPPT 600V
"**GO**", and then find listed Morningstar Communications Document

Network Information

Connect to the TriStar MPPT 600V via an Ethernet network (LAN/WAN) or connect the controller directly to a PC using an Ethernet cross-over cable. Use CAT-5 or CAT-5e twisted pair Ethernet cables with RJ-45 connectors. A network diagram for both scenarios is shown in figure 5-3 below.

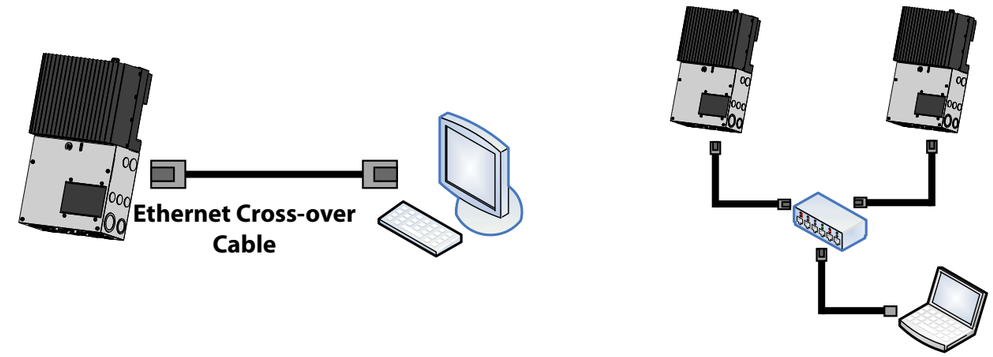

Figure 5-3. Ethernet network diagrams.

Factory Default Network Settings

DHCP	enabled
Live View Web Address	http://tsmppt + serial number **
IP	192.168.1.253 (if DHCP is not enabled)
Subnet Mask	255.255.255.0
Gateway	192.168.1.1
Primary DNS Server	169.254.1.1
MODBUS TCP/IP™ Port	502

*** The Live View web address is unique to each controller. If the TriStar MPPT 600V 600Vserial number is 09501234, then the Live View address is: http://tsmppt09501234. The Live View address is printed on the serial label on the side of the unit for reference.*

The controller's MAC Address is located on the serial label on the side of the controller. Two (2) LEDs on the Ethernet jack indicate link and activity status.

Condition	Yellow LED	Green LED
Network Connection OK	ON	OFF
Network Activity	ON	Blinking
Error	OFF	ON

Web Pages

Connect the TriStar MPPT 600V controller to the network using an Ethernet cable. Wait 5 to 10 minutes for the controller to connect to the network. Open a web browser on any PC on the network. Enter the Live View web address in the address bar of the web browser. The TriStar MPPT 600V main Live View webpage will load. Links are provided to real-time data, history, and network settings adjustment pages.

Custom Settings

The *TriStar MPPT 600V 600VSetup Wizard* in MSView™ provides an interface to adjust all operating parameters. Morningstar's MSView™ PC software can connect to any TriStar MPPT 600V on the Ethernet network or through a RS-232 serial connection. Refer to the help documentation included with MSView™ for more information.

Email & SMS Alerts (Text Messages)

The email and SMS alerts feature sends notification to an email address or mobile phone if one of the following occurs:

- TriStar MPPT 600V self diagnostics fault condition
- TriStar MPPT 600V self diagnostics alarm condition
- User-defined event (e.g. battery voltage is less than 46 Volts)

Up to four e-mails, SMS alerts, or SNMP Traps (see section on next page) can be configured from the network settings web page in the MSView TriStar MPPT 600V Setup Wizard.

SMS alerts can be configured from MSView™. Proceed to enter the outgoing SMTP server address and username/password. NOTE: Most forms of webmail (Google, Yahoo, etc) are not supported as the outgoing SMTP server. This step will be the same as configuring an e-mail alert.

In the recipient's e-mail address field, you will need to enter the cell phone @ the cell phone carrier's SMS Gateway (i.e. 8885553333@vtext.com). Essentially you will be sending an e-mail to the recipient's cell phone provider. The provider will then translate the e-mail into SMS format and deliver it to the recipient's cell phone as a text message.

Contact the cell phone provider or perform an internet search (several web sites exist listing these SMS Gateways) to determine the proper gateway address.

View Logged Data

The TriStar MPPT 600V logs up to 200 days* of daily data. The controller always logs the standard values listed below. Using MSView, the controller can be configured to log additional optional values each day. The maximum number of days that can be stored decreases as the number of logged values increases.

Standard Values

- Minimum Battery Voltage
- Maximum Battery Voltage
- Daily Events (Equalize triggered, Entered Float, Alarm/Fault occurred, Controller Reset)
- Faults / Alarms - recorded only if a fault or alarm occurs that day

Optional Values

- Maximum Array Voltage
- Maximum Power Output
- Charge Amp-hours
- Charge Watt-hours
- Minimum/Maximum Battery Temperature

- Charge stage regulation timers for Absorption, Float, Equalize

** logging only standard values*

NOTE: *If an RTS isn't installed, minimum and maximum battery temperatures will not be available. In this case, minimum/maximum battery temperature will not be logged, even if selected as an optional variable.*

SNMP Traps and (Commands)

NOTE: *The default IP port assignment for the SNMP Trap Receiver is 162*

Asynchronous SNMP traps are configured and behave similarly to e-mail/SMS alerts. An SNMP trap receiver can be specified in MSView™. When a specified condition is met (alarm, fault, custom event), a trap is sent to the receiver, notifying it of the condition.

As with e-mail and SMS alerts, the Ethernet equipped controller may have traps triggered by conditions of other MODBUS™ enabled units on the network (EIA-485).

For telecom and industrial applications that **require** full SNMP monitoring of deployed systems, the TriStar MPPT 600V **WILL NOT** operate as an SNMP Agent supporting the commands below, **UNLESS**, a Morningstar **EMC-1 accessory is installed WITH the unit.** Complete SNMP (v2c) polling capabilities and implementation, available through the **required EMC-1 accessory**, are described in Section 8.5 of the Morningstar Communications Document (Product Connectivity Manual) and EMC-1 product manual located at:

http://support.morningstarcorp.com

"What Are You Looking For": All Documents

"Choose Product": Ethernet Meterbus Converter

"**GO**", and then find listed Morningstar Communications Document and EMC-1 Operator's Manual - EN

NOTE: SNMP does not support the **SET** message, which allows a user to alter a setting on the device. This precaution helps to minimize the security and operational risks associated with the unverified user access. Morningstar's MSView PC software can be used to make changes to device settings, if desired.

GET

Method used by the SNMP manager to request information from a SNMP Agent on a specific OID.

GET NEXT

Method used by SNMP manager to work through an ordered list of OIDs according to the standard MIB hierarchy.

GET BULK

A sequence of GetNext requests, allowing a large segment of the MIB hierarchy to be queried by the SNMP manager from a managed device.

RESPONSE

Used by the SNMP Agent to deliver requested information. Also acts as an acknowledgment.

6.0 Troubleshooting

WARNING: RISK OF ELECTRICAL SHOCK.
NO POWER OR ACCESSORY TERMINALS ARE ELECTRICALLY ISOLATED FROM DC INPUT, AND MAY BE ENERGIZED WITH HAZARDOUS SOLAR VOLTAGE. UNDER CERTAIN FAULT CONDITIONS, BATTERY COULD BECOME OVER-CHARGED. TEST BETWEEN ALL TERMINALS AND GROUND BEFORE TOUCHING.

A***VERTISSEMENT: RISQUE DE CHOC ÉLETRIQUE***.
NON ALIMENTATION OU AUX BORNES D'ACCESSOIRES SONT ISOLÉS ÉLECTRIQUEMENT DE L'ENTRÉE DE C.C ET DOIT ÊTRE ALIMENTÉS À UNE TENSION DANGEREUSE SOLAIRE. SOUS CERTAINES CONDITIONS DE DÉFAILLANCE, LA BATTERIE POURRAIT DEVENIR TROP CHARGÉE. TEST ENTRE TOUTES LES BORNES ET LA MASSE AVANT DE TOUCHER.

WARNING: Shock Hazard
A means of disconnecting all power supply poles must be provided. These disconnects must be incorporated in the fixed wiring. Open all power source disconnects before removing controller wiring cover, or accessing wiring.

AVERTISSEMENT: *Risque de décharge électrique*
Un moyen de déconnexion de tous les poteaux d'alimentation doit être fourni. Ceux-ci se déconnecte doit être intégrée dans le câblage fixe. Ouvrir que toutes les source d'énergie se déconnecte avant de retirer le couvercle de la contrôleur, ou accès au câblage.

6.1 Battery Charging and Performance Issues

Problem:
No LED indications, controller does not appear to be powered

Solution:
With a multi-meter, check the voltage at the battery terminals on the TriStar MPPT 600V. Battery voltage must be 16* vdc or greater. If the voltage on the battery terminals of the controller is between 16 and 72 vdc, and no LEDs are lit, contact your authorized Morningstar dealer for service. If no voltage is measured, check wiring connections, fuses, and breakers.

* Unit will power on with 10V, but 16V is required for charging to occur.

Problem:
The TriStar MPPT 600V is not charging the battery.

Solution:
Check the three (3) battery SOC LEDs. If they are flashing a sequence, see *Section 4.4 Faults & Alarms* of this manual to determine the cause. If a TriStar Meter 2-600V is connected, the diagnostics menu will display reported faults and alarms.

If the LED indications are normal, check the fuses, breakers, and wiring connections in the power source wiring. With a multi-meter, check the array voltage directly at the TriStar MPPT 600V solar input terminals. Solar input must be greater than 100 Volts before charging will begin.

Problem:
Controller makes buzzing and humming noises.

Solution:
No action is required. This is expected due to magnetic resonance and circuit switching.

6.2 Network and Communications Issues

Problem:
Cannot connect to the controller via RS-232

Solution:
Check the following:

- The RS-232 cable is straight-through, not a Null Modem (cross-over)
- If using a serial-USB adapter, verify that the adapter software is installed and a serial COM port has been mapped. Check the activity light on the USB adapter if it has one. If there is no activity, the wrong COM port has been chosen or there is a configuration issue with the adapter.
- The default MODBUS ID of the TriStar MPPT 600V is 1. Verify that the PC software is configured to communicate using the correct ID.

Problem:
Cannot connect to the controller via EIA-485

Solution:
Check the following:

- The RS-232 port is not in use. The EIA-485 and RS-232 ports cannot be used simultaneously. Only one port can be used at a time.
- The RSC-1 adapter used to connect the PC to the EIA-485 network shows a green LED and pulses red when a connection is attempted. See the RSC-1 documentation for more information.
- Each controller or device on the EIA-485 network has been programmed with a unique MODBUS ID.
- A serial cross-over (Null Modem) cable is used for the connection between the PC and the Morningstar RSC-1 485 Adapter. A straight-through serial cable will not work.
- Power is supplied to the 4-wire bus on the Power/Ground lines. The bus requires voltage in the range: 8 - 16 Vdc.
- All bus connections are secure and each terminal is wired in parallel: line A to line A, line B to line B, etc.

Problem:
Cannot connect to the controller via Ethernet

Solution:
See the, “Morningstar Communications Document”, available at:

http://support.morningstarcorp.com

“What Are You Looking For”: All Documents

“Choose Product”: TS-MPPT 600V

“**GO**”, and then find listed Morningstar Communications Document

7.0 Maintenance and Service

7.1 Important Safety Instructions

SAVE THESE INSTRUCTIONS.
This manual contains important safety, installation and operating instructions for the TriStar MPPT 600V solar controller. The following symbols are used throughout this manual to indicate potentially dangerous conditions or mark important safety instructions:

WARNING:
Indicates a potentially dangerous condition. Use extreme caution when performing this task.

CAUTION:
Indicates a critical procedure for safe and proper operation of the controller.

NOTE:
Indicates a procedure or function that is important for the safe and proper operation of the controller.

AVERTISSEMENT :
Indique une condition potentiellement dangereuse. Faites preuve d’une prudence extrême lors de la réalisation de cette tâche.

PRUDENCE :
Indique une procédure critique pour l’utilisation sûre et correcte du contrôleur.

REMARQUE :
Indique une procédure ou fonction importante pour l’utilisation sûre et correcte du contrôleur.

Safety Information

- Read all of the instructions and cautions in the manual before beginning installation.
- There are no user serviceable parts inside the TriStar MPPT 600V. Do not disassemble or attempt to repair the controller.

WARNING: RISK OF ELECTRICAL SHOCK.
NO POWER OR ACCESSORY TERMINALS ARE ELECTRICALLY ISOLATED FROM DC INPUT, AND MAY BE ENERGIZED WITH HAZARDOUS SOLAR VOLTAGE. UNDER CERTAIN FAULT CONDITIONS, BATTERY COULD BECOME OVER-CHARGED. TEST BETWEEN ALL TERMINALS AND GROUND BEFORE TOUCHING.

WARNING: Shock Hazard
Disconnect all power sources to the controller before removing the wiring box cover. Never remove the cover when voltage exists on the TriStar MPPT 600V power connections.

- External solar and battery disconnects are required.
- Disconnect all sources of power to the controller before installing or adjusting the TriStar MPPT 600V.
- There are no fuses or disconnects inside the TriStar MPPT 600V Do not attempt to repair.

Informations de Sécurité

- Lisez toutes les instructions et les avertissements figurant dans le manuel avant de commencer l'installation.
- Le TriStar MPPT 600V ne contient aucune pièce réparable par l'utilisateur. Ne démontez pas ni ne tentez de réparer le contrôleur.

AVERTISSEMENT: RISQUE DE CHOC ÉLETRIQUE.
NON ALIMENTATION OU AUX BORNES D'ACCESSOIRES SONT ISOLÉS ÉLECTRIQUEMENT DE L'ENTRÉE DE C.C ET DOIT ÊTRE ALIMENTÉS À UNE TENSION DANGEREUSE SOLAIRE. SOUS CERTAINES CONDITIONS DE DÉFAILLANCE, LA BATTERIE POURRAIT DEVENIR TROP CHARGÉE. TEST ENTRE TOUTES LES BORNES ET LA MASSE AVANT DE TOUCHER.

AVERTISSEMENT: Risque de décharge électrique
Un moyen de déconnexion de tous les poteaux d'alimentation doit être fourni. Ceux-ci se déconnecte doit être intégrée dans le câblage fixe. Ouvrir que toutes les source d'énergie se déconnecte avant de retirer le couvercle de la contrôleur, ou accès au câblage.

- External solaire et la batterie se déconnecte sont nécessaires.
- Déconnectez toutes les sources d'alimentation du contrôleur avant d'installer ou de régler le TriStar MPPT 600V.
- Le TriStar MPPT 600V 600Vne contient aucun fusible ou interrupteur. Ne tentez pas de réparer.
- Installez des fusibles/coupe-circuits externes selon le besoin.

Installation Safety Precautions

WARNING:
This unit is not provided with a GFDI device. This charge controller must be used with an external GFDI device as required by the Article 690 of the National Electrical Code for the installation location.

- Mount the TriStar MPPT 600V indoors. Prevent exposure to the elements and do not allow water to enter the controller.
- Install the TriStar MPPT 600V in a location that prevents casual contact. The TriStar MPPT 600V heatsink can become very hot during operation.
- Use insulated tools when working with batteries.
- Avoid wearing jewelry during installation.
- The battery bank must be comprised of batteries of same type, make, and age.

- Do not smoke near the battery bank.
- Power connections must remain tight to avoid excessive heating from a loose connection.
- Use properly sized conductors and circuit interrupters.
- The grounding terminal is located in the wiring compartment and is identified by the symbol below.

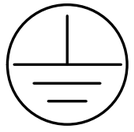

Ground Symbol

- This charge controller is to be connected to DC circuits only. These DC connections are identified by the symbol below:

Direct Current Symbol

The TriStar MPPT 600V controller must be installed by a qualified technician in accordance with the electrical regulations of the country where the product is installed. A means of disconnecting all power supply poles must be provided. These disconnects must be incorporated in the fixed wiring. A permanent, reliable earth ground must be established with connection to the wiring compartment ground terminal.

The grounding conductor must be secured against any accidental detachment. The knock-outs in the wiring compartment must protect wires with conduit or rubber rings.

Précautions de Sécurité D'installation

AVERTISSEMENT: *L'appareil n'est pas fourni avec un dispositif GFDI. Ce contrôleur de charge doit être utilisé avec un dispositif GFDI externe tel que requis par l'Article 690 du Code électrique national de l'emplacement de l'installation.*

- Montez le TriStar MPPT 600V à l'intérieur. Empêchez l'exposition aux éléments et la pénétration d'eau dans le contrôleur.
- Installez le TriStar MPPT 600V dans un endroit qui empêche le contact occasionnel. Le dissipateur de chaleur peut devenir très chaud pendant le fonctionnement.
- Utilisez des outils isolés pour travailler avec les batteries.
- Évitez le port de bijoux pendant l'installation.
- Le groupe de batteries doit être constitué de batteries du même type, fabricant et âge.
- Ne fumez pas à proximité du groupe de batteries.
- Les connexions d'alimentation doivent rester serrées pour éviter une surchauffe excessive d'une connexion desserrée.

- Utilisez des conducteurs et des coupe-circuits de dimensions adaptées.
- La borne de mise à la terre se trouve dans le compartiment de câblage et est identifiée par le symbole ci-dessous estampillé dans le boit:

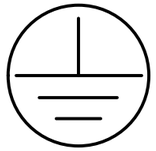

- Ce contrôleur de charge ne doit être connecté qu'à des circuits en courant continu. Ces connexions CC sont identifiées par le symbole ci-dessous:

Le contrôleur TriStar MPPT 600V 600V600V doit être installé par un technicien qualifié conformément aux règlementations électriques du pays où est installé le produit.

Un moyen d'assurer la déconnexion de tous les pôles de l'alimentation doit être fourni. Cette déconnexion doit être incorporée dans le câblage fixe.

À l'aide de la borne de mise à la masse du TriStar MPPT 600V 600V600V (dans le compartiment de câblage), un moyen permanent et fiable de mise à la terre doit être fourni. La fixation de la mise à la terre doit être fixée contre tout desserrage accidentel.

Les ouvertures d'entrée au compartiment de câblage du TriStar MPPT 600V 600V600V doivent être protégées avec un conduit ou une bague.

Battery Safety

WARNING: *A battery can present a risk of electrical shock or burn from large amounts of short-circuit current, fire, or explosion from vented gases. Observe proper precautions.*

AVERTISSEMENT: *Une batterie peut présenter a ris que de choc électrique ou de brûlure de grandes quantités de court-circuit curlouer, incendie ou explosion de ventilé gaz. Observer précautions appropriées.*

WARNING: Risk of Explosion.
Proper disposal of batteries is required. Do not dispose of batteries in fire. Refer to local regulations or codes for requirements.

AVERTISSEMENT: Risque d'Explosion.
Au rebut des piles est nécessaire. Ne pas jeter les piles dans le feu. Se référer aux régle mentations locales ou des codes pour les exigences.

CAUTION: *When replacing batteries, proper specified number, sizes types and ratings based on application and system design*

PRUDENCE: *Lorsque le remplacement des piles, utilisez correctement nombre spécifié, tailles, types et les évaluations basées sur conception de système et d'application.*

CAUTION: *Do not open or mutilate batteries. Released electrolyte is harmful to skin, and may be toxic.*

PRUDENCE: *Ne pas ouvrir ou mutiler les piles. L'électrolyte est nocif pour la peau et peut être toxique.*

- Servicing of batteries should be performed, or supervised, by personnel knowledgeable about batteries, and the proper safety precautions.
- Be very careful when working with large lead-acid batteries. Wear eye protection and have fresh water available in case there is contact with the battery acid.
- Remove watches, rings, jewelry and other metal objects before working with batteries.
- Wear rubber gloves and boots
- Use tools with insulated handles and avoid placing tools or metal objects on top of batteries.
- Disconnect charging source prior to connecting or dis-connecting battery terminals.
- Determine if battery is inadvertently grounded. If so, remove the source of contact with ground. Contact with any part of a grounded battery can result in electrical shock. The likelihood of such a shock can be reduced if battery grounds are removed during installation and maintenance (applicable to equipment and remote battery supplies not having a grounded supply circuit*).
- Carefully read the battery manufacturer's instructions before installing / connecting to, or removing batteries from, the TriStar MPPT 600V.
- Be very careful not to short circuit the cables connected to the battery.
- Have someone nearby to assist in case of an accident.
- Explosive battery gases can be present during charging. Be certain there is enough ventilation to release the gases.
- Never smoke in the battery area.
- If battery acid comes into contact with the skin, wash with soap and water. If the acid contacts the eye, flood with fresh water and get medical attention.
- Be sure the battery electrolyte level is correct before starting charging. Do not attempt to charge a frozen battery.
- Recycle the battery when it is replaced.

- Entretien des batteries devrait être effectué ou supervisé, par un personnel bien informé sur les piles et les précautions de sécurité appropriées.
- Soyez très prudent quand vous travaillez avec des grandes batteries au plomb. Portez des lunettes de protection et ayez de l'eau fraîche à disposition en cas de contact avec l'électrolyte.
- Enlevez les montres, bagues, bijoux et autres objets mé talliques avant de travailler avec des piles.
- Porter des bottes et des gants de caoutchouc
- Utiliser des outils avec poignées isolantes et évitez de placer des outils ou des objets métalliques sur le dessus de batteries.

- Débrancher la source de charge avant de brancher ou dis-reliant les bornes de la batterie.
- Utilisez des outils isolés et évitez de placer des objets métalliques dans la zone de travail.
- Déterminer si batterie repose par inadvertance. Dans l'affirmative, supprimer la source du contact avec le sol. Contact avec n'importe quelle partie d'une batterie mise à la terre peut entraîner un choc électrique. La probabilité d'un tel choc peut être réduite si des motifs de batterie sont supprimés pendant l'installation et maintentretien (applicable à l'équipement et les fournitures de pile de la télécommande n'ayant ne pas un circuit d'alimentation mise à la terre *).
- Lisez attentivement les instructions du fabricant de la batterie avant d'installer / connexion à ou retrait des batteries du TriStar MPPT 600V.
- Veillez à ne pas court-circuiter les câbles connectés à la batterie.
- Ayez une personne à proximité qui puisse aider en cas d'accident.
- Des gaz explosifs de batterie peuvent être présents pendant la charge. Assurez-vous qu'une ventilation suffisante évacue les gaz.
- Ne fumez jamais dans la zone des batteries
- En cas de contact de l'électrolyte avec la peau, lavez avec du savon et de l'eau. En cas de contact de l'électrolyte avec les yeux, rincez abondamment avec de l'eau fraîche et consultez un médecin.
- Assurez-vous que le niveau d'électrolyte de la batterie est correct avant de commencer la charge. Ne tentez pas de charger une batterie gelée.
- Recyclez la batterie quand elle est remplacée.

7.2 Maintenance Schedule

WARNING: Shock Hazard
Disconnect all power sources to the controller before removing the wiring box cover. Never remove the cover when voltage exists on the TriStar MPPT 600V power connections.

AVERTISSEMENT: Risque de décharge électrique
Déconnectez toutes les sources d'alimentation du contrôleur avant d'enlever le couvercle du boîtier de câblage. Ne retirez jamais le couvercle en présence de tension sur une des connexions d'alimentation du TriStar MPPT 600V.

Table 7-1 below lists the recommended maintenance schedule to keep your TriStar MPPT 600V performing optimally.

Schedule	Maintenance Items
2 weeks after installation	Re-tighten power terminal connections to specified torque values. For DB model, re-tighten all pre-wired solar, battery, and terminal block connections to specified torque values.
3 months after installation	Re-tighten power terminal connections to specified torque values. For DB model, re-tighten all pre-wired solar, battery, and terminal block connections to specified torque values.
Monthly or After Each Equalization	Inspect the battery bank. Look for cracked or bulging cases, and corroded terminals. For wet cell (flooded type) batteries, make sure the water level is correct. Wet cell water levels should be checked monthly or according to the manufacturer's recommendations.
Annually	Clean the heatsink fins with a clean, dry rag. Inspect all wiring for damage or fraying. Inspect for nesting insects. Re-tighten all wiring terminal connections to specified torque values. For DB model, re-tighten all pre-wired solar, battery, and terminal block connections to specified torque values. Inspect the system earth grounding for all components. Verify all grounding conductors are appropriately secured to earth ground.

Table 7-1. Maintenance Schedule

8.0 Warranty and Claim Procedure

WARRANTY

LIMITED WARRANTY - Morningstar Solar Controllers and Inverters

All Morningstar *Professional Series™* products, except the SureSine™ inverter, are warrantied to be free from defects in materials and workmanship for a period of FIVE (5) years from the date of shipment to the original end user. Warranty on replaced units, or field-replaced components, will be limited only to the duration of the original product coverage.

Morningstar *Essentials Series™*, and SureSine™ inverter, products are warrantied to be free from defects in materials and workmanship for a period of TWO (2) years from the date of shipment to the original end user. Warranty on replaced units, or field-replaced components, will be limited only to the duration of the original product coverage.

Morningstar will, at its option, repair or replace any such defective units.

CLAIM PROCEDURE:

Before requesting warranty service, check the Operator's Manual to verify product failure. Return the defective product to your authorized Morningstar distributor with shipping charges prepaid. Provide proof of date and place of purchase.

An RMA number must be issued by Morningstar prior to return of any unit(s) under this warranty. RMA information must include product model, serial number, detailed failure description, panel type, array size-configuration, type of batteries and system load details. This information is critical to rapid disposition of your warranty claim.

Morningstar will pay the return shipping charges if the repairs are covered under the warranty.

WARRANTY EXCLUSIONS AND LIMITATIONS

This warranty does not apply under the following conditions:
- Damage by accident, negligence, abuse or improper use
- PV or load currents exceeding the ratings of the product
- Unauthorized product modification or attempted repair
- Damage occurring during shipment
- Damage results from acts of nature such as lightning and weather extremes

THE WARRANTY AND REMEDIES SET FORTH ABOVE ARE EXCLUSIVE AND IN LIEU OF ALL OTHERS, EXPRESS OR IMPLIED. MORNINGSTAR SPECIFICALLY DISCLAIMS ANY AND ALL IMPLIED WARRANTIES, INCLUDING, WITHOUT LIMITATION, WARRANTIES OF MERCHANTABILITY AND FITNESS FOR A PARTICULAR PURPOSE. No Morningstar distributor, agent or employee is authorized to make any modification or extension to this warranty.

MORNINGSTAR IS NOT RESPONSIBLE FOR INCIDENTAL OR CONSEQUENTIAL DAMAGES OF ANY KIND, INCLUDING BUT NOT LIMITED TO LOST PROFITS, DOWNTIME, GOODWILL OR DAMAGE TO EQUIPMENT OR PROPERTY.

R15-1/20

WARRANTY CLAIM PROCEDURE

1. Before proceeding, please refer to product manual, including troubleshooting section.

2. Contacting your authorized Morningstar distributor or dealer from whom you purchased the unit is the first step in the warranty process. Local dealers can often address warranty issues quickly.

3. If supplier is unable to address the issue, please contact Morningstar by e-mail (support@morningstarcorp.com) with:

   (A) purchase location -- business or company name

   (B) full model and serial numbers (SN is 8-digits on unit bar label)

   (C) failure behavior, including LED indications

   (D) array configuration, panel Pmax, Voc, Vmp, Isc, and nominal battery voltage; these specifications are needed to receive assistance.

   (E) multi-meter available (for field troubleshooting)

4. After warranty replacement has been approved and new unit(s) received, please return failed unit(s) using pre-paid shipping label, and follow any product specific instructions if requested by Morningstar Warranty Dept.

5. If instructed by Morningstar, after warranty replacement shipment has been received, return of failed unit(s) is required before further warranty replacements can be considered for the original or future cases.

NOTE: Please do not return units without an RMA or case number. Doing so will increase the time required to resolve your claim.

9.0 Technical Specifications

Electrical

	TS-MPPT-60-600V-48	TS-MPPT-60-600V-48-DB
Nominal System Voltage	48 Volts	48 Volts
Maximum Battery Current	60 Amps	60 Amps (63A breaker included)
Maximum Solar Input Voltage	600 Volts dc	600 Volts dc
Maximum Operating Input Current	15 Amps	15 Amps
Battery Operating Voltage Range	16 - 72 Volts dc	16 - 72 Volts dc
Nominal Maximum Input Power*	3200 Watts	3200 Watts
Voltage Accuracy	≤ 0.1 % ± 100 mV	≤ 0.1 % ± 100 mV
Self consumption (tare loss)	2-3.5 Watts	2-3.5 Watts
Transient Surge Protection	4500 Watts / port	4500 Watts / port

*These power levels refer to the maximum wattage the TS-MPPT-60-600V-48 can process. Higher power arrays can be used without damaging the controller, but array cost-benefit will be reduced at power levels much beyond the nominal rating.

Battery Charging

Charging algorithm:	4 - stage
Charging stages:	Bulk, Absorption, Float, Equalize
Temperature compensation coefficient:	-5 mV / °C / cell (25 °C ref.)
Temperature compensation range (RTS connected)	-30 °C to +80 °C
Temperature compensated set-points:	Absorption, Float, Equalize, HVD
Battery high voltage disconnect:	Charge stage regulation voltage +0.5V
Battery low voltage disconnect / reconnect:	14.0 / 16.0 Volts

Charging Set-points (48 Volt systems):

Settings Switches	Battery Type	Absorp. Stage	Float Stage	Equalize Stage	Absorp. Time	Equalize Time	Equalize Timeout	Equalize Interval
sw: 4-5-6		Volts	Volts	Volts	Minutes	Minutes	Minutes	Days
off-off-off	1 - Sealed*	56.00	54.80		150			
off-off-on	2 - Sealed*	56.60	54.80	57.60	150	60	120	28
off-on-off	3 - Sealed*	57.20	54.80	58.40	150	60	120	28
off-on-on	4 - AGM/Flooded	57.60	54.80	60.40	180	120	180	28
on-off-off	5 - Flooded	58.40	54.00	61.20	180	120	180	28
on-off-on	6 - Flooded	58.80	54.00	61.60	180	180	240	28
on-on-off	7 - L-16	61.60	53.60	64.00	180	180	240	14
on-on-on	8 - Custom	Custom	Custom	Custom	Custom	Custom	Custom	Custom

** "Sealed" battery type includes gel and AGM batteries*
See section 4.2 for more information

Battery Charging Status LEDs

LED Indication	Battery Charging Status
Green Flashing (fast) - 2 to 3 times per second	Equalize charging stage
Green Flashing - once per second	Absorption charging stage
Green Flashing (slow) - once per two seconds	Float charging stage
Green	53.2 Volts ≤ Vbattery
Green & Yellow	52.0 Volts ≤ Vbattery < 53.2 Volts
Yellow	50.8 Volts ≤ Vbattery < 52.0 Volts
Yellow & Red	48.0 Volts ≤ Vbattery < 50.8 Volts
Red	Vbattery < 48.0 Volts

Mechanical

		TS-MPPT-60-600V-48	TS-MPPT-60-600V-48-DB
Dimensions:	HWD (in.)	15.4 x 8.7 x 5.9	21.4 x 8.7 x 5.9
	HWD (cm)	39.2 x 22.1 x 14.9	54.2 x 22.1 x 14.9
Product Weight (lb / kg)		19.8 / 8.98	28.11 / 12.75
Power board terminal lug wire size:		14 AWG / 2.5 mm^2 to 2 AWG / 33.6 mm^2	

Terminal block wire size (DB model)

Solar:	14 AWG / 2.5 mm^2 to 4 AWG / 21.1 mm^2
Battery:	14 AWG / 2.5 mm^2 to 2 AWG / 33.6 mm^2
Grounding:	14 AWG / 2.5 mm^2 to 4 AWG / 21.1 mm^2

Recommended Torques:
5/16 in. power board screws 50 in-lb / 5.65 N-m
#10 battery terminal block screws: 15 in-lb / 2.26 N-m
5/16 in. battery terminal block screws: 70 in-lb / 7.91 N-m
1/4 in. PV and grounding blocks: 40 in-lb / 4.52 N-m

Battery Sense terminals:

Minimum wire size	24 AWG / 0.25 mm^2
Maximum wire size	16 AWG / 1.0 mm^2
Recommended torque	3.5 in-lb / 0.40 N-m
Knock-outs (trade sizes)	M20 & 1/2", 1", 1 - 1/4"
Mounting	Vertical Surface

Environmental

Operating Altitude	Below 2000 meters
Ambient Temperature Range	-40°C to +45°C
Storage Temperature	-55°C to +85°C
Humidity	100% N.C.
Enclosure	IP20 Type 1 (indoor & vented)

Protections

Solar High Voltage Disconnect
Solar High Voltage Reconnect
Battery High Voltage Disconnect
Battery High Voltage Reconnect
High Temperature Disconnect
High Temperature Reconnect

10.0 Appendix

De-ratings

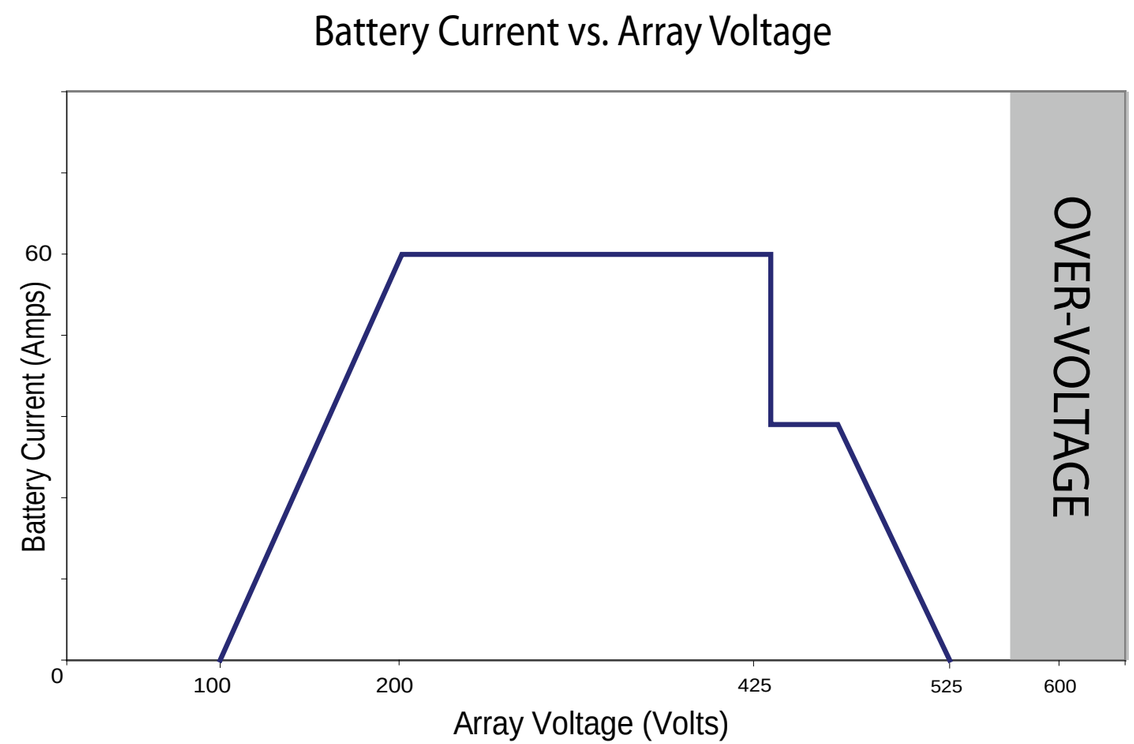

Figure 10-1. Battery Current vs. Array Voltage

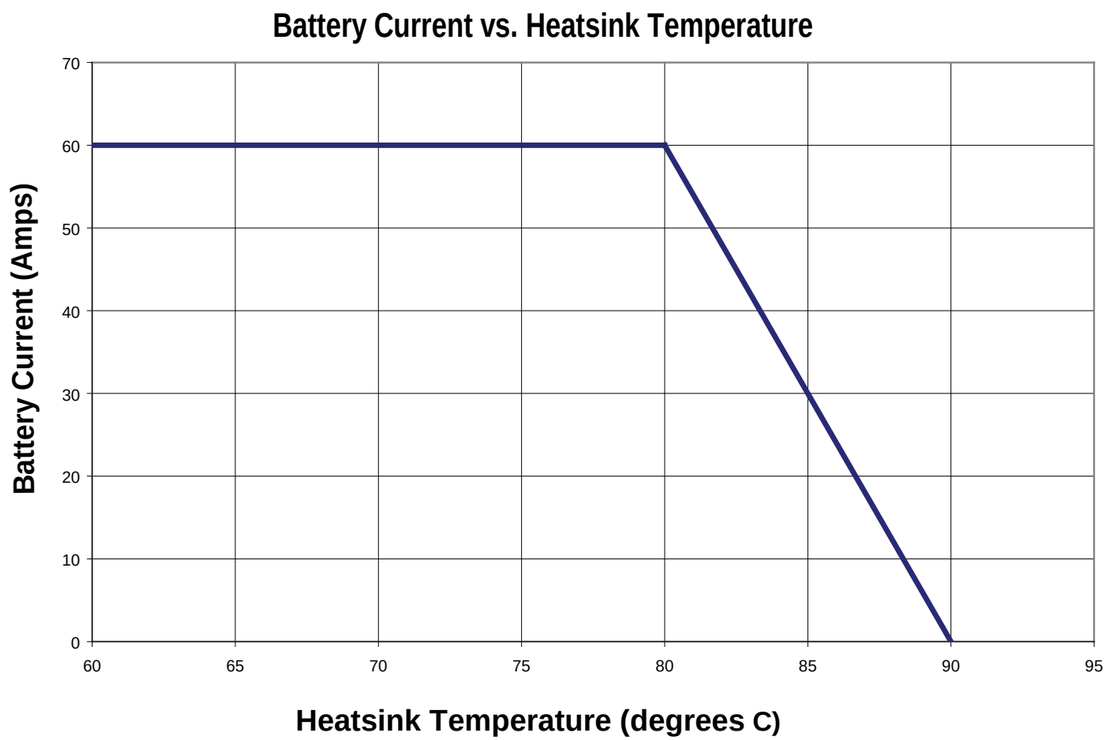

Figure 10-2. Battery Current vs. Heatsink Temperature

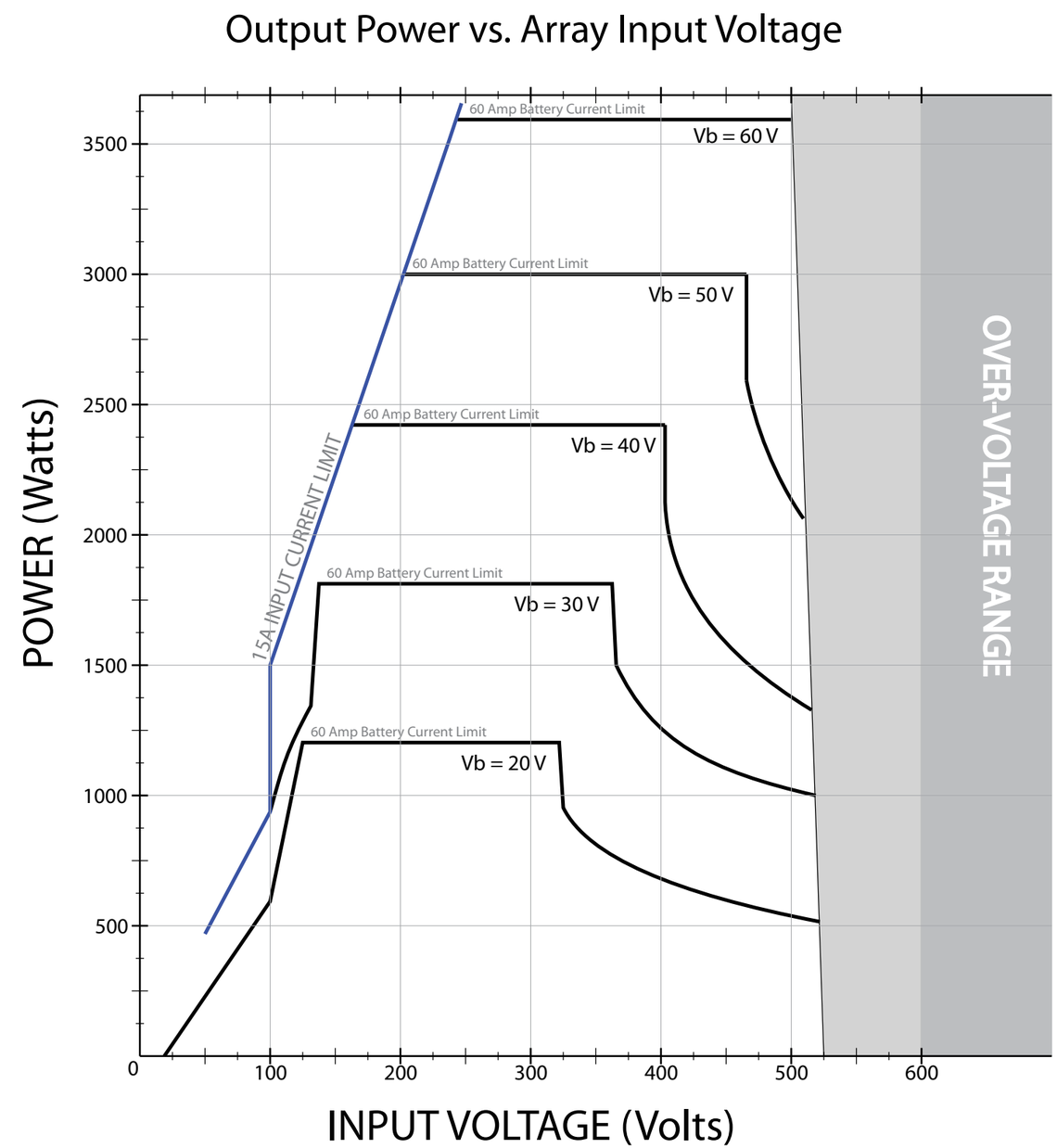

Figure 10-3. Output Power vs. Array Voltage

Efficiency

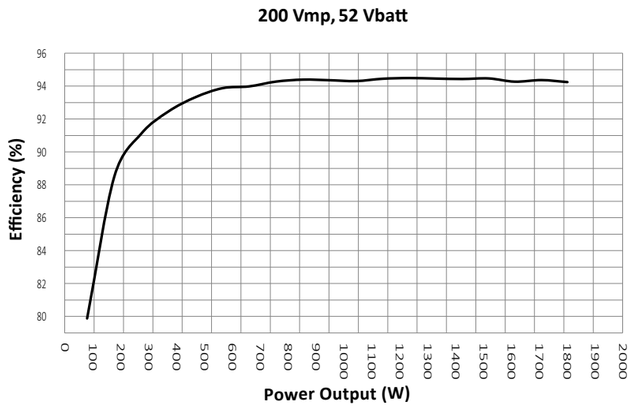

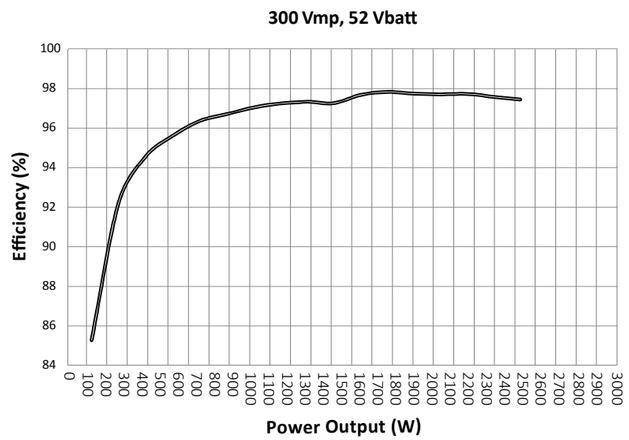

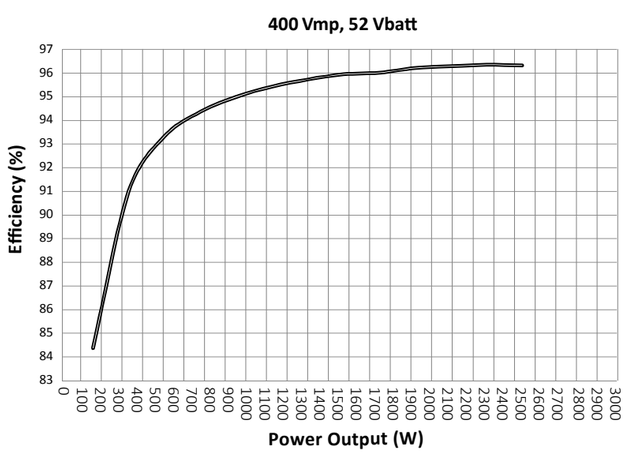

Figure 10-4. Efficiency Curves

2% Voltage Drop Charts for 75°C Stranded Copper Wire

1-Way Wire Distance (feet), 48 Volt System

	60 Amps	55 Amps	50 Amps	45 Amps	40 Amps	35 Amps	30 Amps	25 Amps	20 Amps	15 Amps
00	89.6	97.8	107.5	119.5	134.4	153.6	179.2	215.1	268.9	358.5
0	71.0	77.5	85.2	94.7	106.6	121.8	142.1	170.5	213.1	284.2
2	44.7	48.7	53.6	59.6	67.0	76.6	89.3	107.2	134.0	178.7
4	28.1	30.7	33.8	37.5	42.2	48.2	56.3	67.5	84.4	112.6
6	17.7	19.3	21.2	23.5	26.5	30.3	35.3	42.4	53.0	70.6
8	11.1	12.2	13.4	14.9	16.7	19.1	22.3	26.7	33.4	44.6
10	7.0	7.6	8.4	9.3	10.5	12.0	14.0	16.8	21.0	28.0
12	4.4	4.8	5.3	5.8	6.6	7.5	8.8	10.5	13.1	17.5
14	2.8	3.0	3.3	3.7	4.1	4.7	5.5	6.6	8.3	11.0

Table 9.1 Maximum 1-way wire distance for 48V systems, stranded copper

1-Way Wire Distance (meters), 48 Volt System

Wire Size (mm^2)	60 Amps	55 Amps	50 Amps	45 Amps	40 Amps	35 Amps	30 Amps	25 Amps	20 Amps	15 Amps
70	27.3	29.8	32.8	36.4	41.0	46.8	54.6	65.6	82.0	109.3
50	21.7	23.6	26.0	28.9	32.5	37.1	43.3	52.0	65.0	86.6
35	13.6	14.9	16.3	18.2	20.4	23.3	27.2	32.7	40.8	54.5
25	8.6	9.4	10.3	11.4	12.9	14.7	17.2	20.6	25.7	34.3
16	5.4	5.9	6.5	7.2	8.1	9.2	10.8	12.9	16.1	21.5
10	3.4	3.7	4.1	4.5	5.1	5.8	6.8	8.1	10.2	13.6
6	2.1	2.3	2.6	2.8	3.2	3.7	4.3	5.1	6.4	8.5
4	1.3	1.5	1.6	1.8	2.0	2.3	2.7	3.2	4.0	5.3
2.5	0.8	0.9	1.0	1.1	1.3	1.4	1.7	2.0	2.5	3.4

Table 9.2 Maximum 1-way wire distance for 48V systems, stranded copper

Notes:

- The specified wire length is for a pair of conductors from the solar or battery source to the controller (1-way distance)
- Shaded cells in the table indicate that the current exceeds the ampacity of the wire for a given ambient temperature as defined in the following table:

Wire Ampacity* Key	
	Exceeds wire ampacity at 60°C ambient temperature
	Exceeds wire ampacity at 50°C ambient temperature
	Exceeds wire ampacity at 40°C ambient temperature
	Exceeds wire ampacity at 30°C ambient temperature

**Ampacity for not more than three current-carrying conductors in a raceway, cable, or earth (buried).*

2% Voltage Drop Charts for 75°C Solid Copper Wire

1-Way Wire Distance (feet), 48 Volt System

	60 Amps	55 Amps	50 Amps	45 Amps	40 Amps	35 Amps	30 Amps	25 Amps	20 Amps	15 Amps
00	111.2	121.3	133.5	148.3	166.8	190.6	222.4	266.9	333.6	444.8
0	88.2	96.2	105.8	117.6	132.3	151.2	176.4	211.7	264.6	352.8
2	55.4	60.5	66.5	73.9	83.2	95.1	110.9	133.1	166.3	221.8
4	34.9	38.0	41.9	46.5	52.3	59.8	69.8	83.7	104.6	139.5
6	21.9	23.9	26.3	29.2	32.9	37.6	43.9	52.6	65.8	87.7
8	13.8	15.1	16.6	18.4	20.7	23.7	27.6	33.1	41.4	55.2
10	8.7	9.5	10.4	11.6	13.0	14.9	17.4	20.8	26.0	34.7
12	5.5	6.0	6.5	7.3	8.2	9.4	10.9	13.1	16.4	21.8
14	3.4	3.7	4.1	4.6	5.1	5.9	6.9	8.2	10.3	13.7

Table 9.3 Maximum 1-way wire distance for 48V systems, solid copper

1-Way Wire Distance (meters), 48 Volt System

Wire Size (mm^2)	60 Amps	55 Amps	50 Amps	45 Amps	40 Amps	35 Amps	30 Amps	25 Amps	20 Amps	15 Amps
70	33.9	37.0	40.7	45.2	50.8	58.1	67.8	81.4	101.7	135.6
50	26.9	29.3	32.3	35.8	40.3	46.1	53.8	64.5	80.6	107.5
35	16.9	18.4	20.3	22.5	25.4	29.0	33.8	40.6	50.7	67.6
25	10.6	11.6	12.8	14.2	15.9	18.2	21.3	25.5	31.9	42.5
16	6.7	7.3	8.0	8.9	10.0	11.5	13.4	16.0	20.1	26.7
10	4.2	4.6	5.0	5.6	6.3	7.2	8.4	10.1	12.6	16.8
6	2.6	2.9	3.2	3.5	4.0	4.5	5.3	6.3	7.9	10.6
4	1.7	1.8	2.0	2.2	2.5	2.9	3.3	4.0	5.0	6.7
2.5	1.0	1.1	1.3	1.4	1.6	1.8	2.1	2.5	3.1	4.2

Table 9.4 Maximum 1-way wire distance for 48V systems, solid copper

Notes:

- The specified wire length is for a pair of conductors from the solar or battery source to the controller (1-way distance)
- Shaded cells in the table indicate that the current exceeds the ampacity of the wire for a given ambient temperature as defined in the following table:

Wire Ampacity* Key	
	Exceeds wire ampacity at 60°C ambient temperature
	Exceeds wire ampacity at 50°C ambient temperature
	Exceeds wire ampacity at 40°C ambient temperature
	Exceeds wire ampacity at 30°C ambient temperature

**Ampacity for not more than three current-carrying conductors in a raceway, cable, or earth (buried).*

2% Voltage Drop Charts for 90° Stranded Copper Wire

1-Way Wire Distance (feet), 48 Volt System

	60 Amps	55 Amps	50 Amps	45 Amps	40 Amps	35 Amps	30 Amps	25 Amps	20 Amps	15 Amps
00	89.6	97.8	107.5	119.5	134.4	153.6	179.2	215.1	268.9	358.5
0	71.0	77.5	85.2	94.7	106.6	121.8	142.1	170.5	213.1	284.2
2	44.7	48.7	53.6	59.6	67.0	76.6	89.3	107.2	134.0	178.7
4	28.1	30.7	33.8	37.5	42.2	48.2	56.3	67.5	84.4	112.6
6	17.7	19.3	21.2	23.5	26.5	30.3	35.3	42.4	53.0	70.6
8	11.1	12.2	13.4	14.9	16.7	19.1	22.3	26.7	33.4	44.6
10	7.0	7.6	8.4	9.3	10.5	12.0	14.0	16.8	21.0	28.0
12	4.4	4.8	5.3	5.8	6.6	7.5	8.8	10.5	13.1	17.5
14	2.8	3.0	3.3	3.7	4.1	4.7	5.5	6.6	8.3	11.0

Table 9.5 Maximum 1-way wire distance for 48V systems, stranded copper

1-Way Wire Distance (meters), 48 Volt System

Wire Size (mm^2)	60 Amps	55 Amps	50 Amps	45 Amps	40 Amps	35 Amps	30 Amps	25 Amps	20 Amps	15 Amps
70	27.3	29.8	32.8	36.4	41.0	46.8	54.6	65.6	82.0	109.3
50	21.7	23.6	26.0	28.9	32.5	37.1	43.3	52.0	65.0	86.6
35	13.6	14.9	16.3	18.2	20.4	23.3	27.2	32.7	40.8	54.5
25	8.6	9.4	10.3	11.4	12.9	14.7	17.2	20.6	25.7	34.3
16	5.4	5.9	6.5	7.2	8.1	9.2	10.8	12.9	16.1	21.5
10	3.4	3.7	4.1	4.5	5.1	5.8	6.8	8.1	10.2	13.6
6	2.1	2.3	2.6	2.8	3.2	3.7	4.3	5.1	6.4	8.5
4	1.3	1.5	1.6	1.8	2.0	2.3	2.7	3.2	4.0	5.3
2.5	0.8	0.9	1.0	1.1	1.3	1.4	1.7	2.0	2.5	3.4

Table 9.6 Maximum 1-way wire distance for 48V systems, stranded copper

Notes:

- The specified wire length is for a pair of conductors from the solar or battery source to the controller (1-way distance)
- Shaded cells in the table indicate that the current exceeds the ampacity of the wire for a given ambient temperature as defined in the following table:

Wire Ampacity* Key	
	Exceeds wire ampacity at 60°C ambient temperature
	Exceeds wire ampacity at 50°C ambient temperature
	Exceeds wire ampacity at 40°C ambient temperature
	Exceeds wire ampacity at 30°C ambient temperature

**Ampacity for not more than three current-carrying conductors in a raceway, cable, or earth (buried).*

2% Voltage Drop Charts for 90°C Solid Copper Wire

1-Way Wire Distance (feet), 48 Volt System

	60 Amps	55 Amps	50 Amps	45 Amps	40 Amps	35 Amps	30 Amps	25 Amps	20 Amps	15 Amps
00	111.2	121.3	133.5	148.3	166.8	190.6	222.4	266.9	333.6	444.8
0	88.2	96.2	105.8	117.6	132.3	151.2	176.4	211.7	264.6	352.8
2	55.4	60.5	66.5	73.9	83.2	95.1	110.9	133.1	166.3	221.8
4	34.9	38.0	41.9	46.5	52.3	59.8	69.8	83.7	104.6	139.5
6	21.9	23.9	26.3	29.2	32.9	37.6	43.9	52.6	65.8	87.7
8	13.8	15.1	16.6	18.4	20.7	23.7	27.6	33.1	41.4	55.2
10	8.7	9.5	10.4	11.6	13.0	14.9	17.4	20.8	26.0	34.7
12	5.5	6.0	6.5	7.3	8.2	9.4	10.9	13.1	16.4	21.8
14	3.4	3.7	4.1	4.6	5.1	5.9	6.9	8.2	10.3	13.7

Table 9.7 Maximum 1-way wire distance for 48V systems, solid copper

1-Way Wire Distance (meters), 48 Volt System

Wire Size (mm^2)	60 Amps	55 Amps	50 Amps	45 Amps	40 Amps	35 Amps	30 Amps	25 Amps	20 Amps	15 Amps
70	33.9	37.0	40.7	45.2	50.8	58.1	67.8	81.4	101.7	135.6
50	26.9	29.3	32.3	35.8	40.3	46.1	53.8	64.5	80.6	107.5
35	16.9	18.4	20.3	22.5	25.4	29.0	33.8	40.6	50.7	67.6
25	10.6	11.6	12.8	14.2	15.9	18.2	21.3	25.5	31.9	42.5
16	6.7	7.3	8.0	8.9	10.0	11.5	13.4	16.0	20.1	26.7
10	4.2	4.6	5.0	5.6	6.3	7.2	8.4	10.1	12.6	16.8
6	2.6	2.9	3.2	3.5	4.0	4.5	5.3	6.3	7.9	10.6
4	1.7	1.8	2.0	2.2	2.5	2.9	3.3	4.0	5.0	6.7
2.5	1.0	1.1	1.3	1.4	1.6	1.8	2.1	2.5	3.1	4.2

Table 9.8 Maximum 1-way wire distance for 48V systems, solid copper

Notes:

- The specified wire length is for a pair of conductors from the solar or battery source to the controller (1-way distance)
- Shaded cells in the table indicate that the current exceeds the ampacity of the wire for a given ambient temperature as defined in the following table:

Wire Ampacity* Key	
	Exceeds wire ampacity at 60°C ambient temperature
	Exceeds wire ampacity at 50°C ambient temperature
	Exceeds wire ampacity at 40°C ambient temperature
	Exceeds wire ampacity at 30°C ambient temperature

**Ampacity for not more than three current-carrying conductors in a raceway, cable, or earth (buried).*

This product contains the lightweight IP (lwIP) networking stack, which has been incorporated under the following license:

Copyright (c) 2001-2004 Swedish Institute of Computer Science.
All rights reserved.

THIS SOFTWARE IS PROVIDED BY THE AUTHOR "AS IS" AND ANY EXPRESS OR IMPLIED WARRANTIES, INCLUDING, BUT NOT LIMITED TO, THE IMPLIED WARRANTIES OF MERCHANTABILITY AND FITNESS FOR A PARTICULAR PURPOSE ARE DISCLAIMED. IN NO EVENT SHALL THE AUTHOR BE LIABLE FOR ANY DIRECT, INDIRECT, INCIDENTAL, SPECIAL, EXEMPLARY, OR CONSEQUENTIAL DAMAGES (INCLUDING, BUT NOT LIMITED TO, PROCUREMENT OF SUBSTITUTE GOODS OR SERVICES; LOSS OF USE, DATA, OR PROFITS; OR BUSINESS INTERRUPTION) HOWEVER CAUSED AND ON ANY THEORY OF LIABILITY, WHETHER IN CONTRACT, STRICT LIABILITY, OR TORT (INCLUDING NEGLIGENCE OR OTHERWISE) ARISING IN ANY WAY OUT OF THE USE OF THIS SOFTWARE, EVEN IF ADVISED OF THE POSSIBILITY OF SUCH DAMAGE.

11.0 Certifications

- Complies with UL 1741, 62109 and CSA-C22.2 No. 107.1
- IEC 62109
- Complies with the US National Electric Code
- FCC Class B compliant

ENs Directives:

- Complies with ENs and LVD standards for CE marking
- Immunity: EN61000-6-2:1999
- Emissions: EN55022:1994 with A1 and A3 Class B1
- Safety: EN60335-1 and EN60335-2-29 (battery chargers)

TrisStar MPPT™, MeterBus™ are trademarks of Morningstar Corporation

MODBUS™ and MODBUS TCP/IP™ are trademarks of Modbus IDA. www.modbus-ida.org

© 2020 Morningstar Corporation. All rights reserved.

MS-000962 v6.4