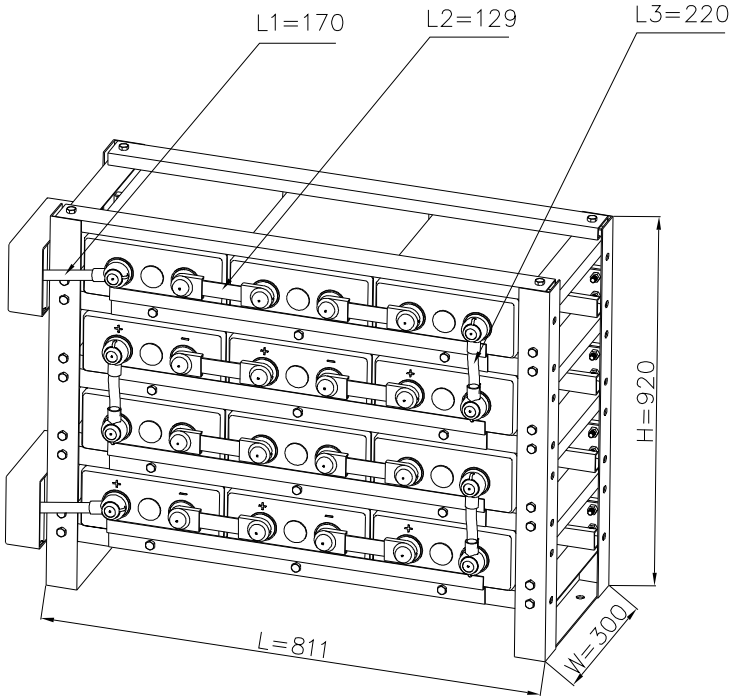

									NARADA
									REXC-400/24V/Four layers Figure of assemble
Mark	Place	Rev. document NO.	Signature	Date					
Design			Standard check up		Drawing mark		Weight (kg)	Propor tion	
Proof									
Technology check									
			Approve		Total:1 page		First page		